FITTED FURNITURE COLLECTION

Prices subject to a 7.5% increase from 1st September 2022.

Please ask your retailer for details.

TAVISTOCK

JUNE 2022

CONTENTS

FITTED FURNITURE

04 Why Choose Tavistock Fitted Furniture?
05 Design, Create, Inspire
06 Guide To Choosing Fitted Furniture
08 Classic or Contemporary?

THE COLLECTION

10 Legacy
12 Legacy Mineral Blue
14 Legacy Flax
16 Legacy Matt Dark Grey
18 Legacy Metro Grey
22 Calm
24 Calm Mineral Blue
26 Calm Matt Dark Grey
28 Calm Gloss White
30 Calm Gloss Light Grey
32 Calm Kona
36 Your Planning, Choosing & Ordering Guide

HANDLES & WORKTOPS

38 Handles
39 Integrated Basins & Worktops
40 Solid Surface Worktops
41 Laminate Worktops

BASINS & WCs

42 Our Basin & WC Styles
44 Semi-Countertop Basins
46 Back To Wall WCs
48 Wall Hung WCs
50 Wall Hung WC & Frames
50 Concealed Cisterns
52 Flush Plates

TAPS

54 Our Tap Styles

MIRRORS & CABINETS

64 Our Mirrors & Cabinets

TECHNICAL

74 Standard & Slim Depth Furniture
78 Handles
79 Integrated Basins & Worktops
80 Solid Surface Worktops
81 Laminate Worktops
82 Clad-On End Panels
83 Plinths & Bath Panels
85 Semi-Countertop Basins
87 Back To Wall WCs
88 Comfort Height WCs
89 Wall Hung WCs
90 Wall Hung WC Frames
91 Cisterns
92 Flushing Options

USEFUL INFORMATION

94 Tips For Planning Your Bathroom
96 Guarantees & Useful Information
96 Swatch Sample Service
97 Website & Brochures
97 Our Stockists
98 Customer Service

All prices are inclusive of VAT at 20%

DESIGNERS' CHOICE

Take a look at our stunning, classically styled Legacy flax fitted furniture range. See pages 14-15.

FINISHING TOUCHES

Opt to create a seamless look and feel to your fitted furniture with one of our sleek worktops with integrated basin. See page 39-41.

Complete the look of your furniture with a handle that best reflects your chosen bathroom style. See page 38.

WHY CHOOSE TAVISTOCK FITTED FURNITURE?

There is beauty in simplicity. So much of our lives are hectic and demanding but with our fitted furniture it is easy for you to design and plan your new bathroom. What's more we have simplified the selection process into a series of basic steps, just follow our guide to create your very own Tavistock fitted furniture bathroom – it's that simple.

You can depend on Tavistock to deliver the highest levels of service and reliability, but what makes us special is our in-house design team. Excellent design is of the utmost importance to us. We design all of our products in our offices in Bath Spa and ensure our perspective remains fresh and innovative. High quality materials and craftmanship go into every Tavistock product so they not only look good but fulfil their purpose time after time.

For complete peace of mind, we offer extensive guarantees across our entire range, so you can be sure to choose any Tavistock product with complete confidence.

5 YEAR GUARANTEE

5 Year Guarantee
cisterns & WC frames, toilet seats & bath panels

10 YEAR GUARANTEE

10 Year Guarantee
furniture, taps & showers, mirrors & cabinets

20 YEAR GUARANTEE

20 Year Guarantee
basins & WCs

DESIGN, CREATE, INSPIRE

GUIDE TO CHOOSING FITTED FURNITURE

Tavistock fitted furniture has a wide variety of bespoke features. Follow the guide below for a quick overview and understanding of how to create your very own Tavistock fitted furniture bathroom. A more detailed planning guide can be found on pages 36-37.

01

UNDERSTAND YOUR SPACE

Make sure you get a feel for your bathroom layout before you start. Look at any wasted areas which could be maximised with the addition of storage units. It is advisable to install a WC unit in a similar position to the current WC to minimise installation costs. If you do want to change the layout of your bathroom, a good Tavistock bathroom retailer will be able to guide you through the planning process.

02

CHOOSE YOUR BATHROOM STYLE & FINISH

We have two stunning furniture styles to choose from, classic Legacy available in 4 finishes or sleek contemporary Calm available in 5 finishes, see pages 10-35 for further details. All our Legacy units come with an oak internal carcass, while Calm furniture features a graphite internal finish (with the exception of gloss white finish which features a white carcass). All have been specifically chosen to complement the furniture style.

Contemporary Calm

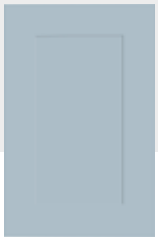

Classic Legacy

03

MAKE YOUR UNITS BESPOKE

Choose from our wide range of handles & worktops to give your bathroom units a bespoke look and feel.
See pages 38-41 for all handle & worktop options.

04

COMPLETE YOUR BATHROOM

Complete the design of your new bathroom by choosing from our raft of stylish basins & WCs as well as coordinating brassware, elegant mirrors & useful cabinets.
See pages 42-71 for options.

05

CHOOSING THE RIGHT INSTALLER

As with any new bathroom furniture, it is advisable to use an experienced and qualified installer. Many Tavistock retailers will be able to offer a design and installation service or recommend a suitable fitter or Tradesperson.

CLASSIC OR CONTEMPORARY?

From classic styling to sleek modern lines, our collection of fitted bathroom furniture has something to suit every taste.

Door Styles

The Legacy range, with its clean shaker lines, delivers beautiful craftsmanship and classic good looks. It has a truly timeless feel when paired with the Vitoria sanitaryware range. Alternatively you can blend traditional and more modern styling by opting for one of our contemporary sanitaryware ranges for an altogether different look.

The pared back design of Calm offers a much more understated look with its minimal aesthetic. The slab style doors make for a sleek and modern design statement.

Colour Palette

A carefully selected palette of soft neutrals, rich wood or the deep hues of matt dark grey will define the overall look and feel of your bathroom.

Lighter colours such as gloss white and metro grey are particularly effective in smaller bathrooms. Colours such as flax and light grey can be used to create a homely feel. Painted finishes, particularly the darker, dramatic shades, are very on-trend.

We have conveniently paired each door finish with a coordinating carcass colour, simplifying the decision making process.

The Legacy Collection

Whatever your bathroom space, big or small, Legacy offers the flexibility and versatility you need to create a unified, traditional look. Standard and slim depth unit options are available in the sizes shown above. Alongside floor units, a full height unit and wall cupboards there are also coordinating bath panels. Use filler panels to create a framed style and personalise with your choice of worktop, handles, basin, WC and taps.

Door Finish Options

Mineral Blue

Flax

Matt Dark Grey

Metro Grey

Carcass Finish

Oak

LEGACY

MINERAL BLUE

The Legacy Collection

Swatch sample
service available
See page 96 for details

Upgrade

Add Functionality with a charging station

The subtle unit can be installed into our floor cupboards or wall cabinets and includes both a two-pin charging socket and a USB port

see page77

This cooling Mineral Blue finish, paired with Legacy's shaker style design makes for an effortless classic-meets-contemporary feel. Co-ordinate with Lansdown sanitaryware, stylish bronze Sofia handles and a minimal, black-framed Verge mirror to complete the look.

CREATE THE LOOK

Want to recreate this look for your new bathroom? We have created a handy floor plan and useful list of all the items used to design this classically styled bathroom.

Legacy - Slim Depth Furniture

- 600 back to wall WC unit
- Lansdown back to wall WC & seat
- Vortex cistern
- Oval dual flush plate
- 300 tall floor cupboard (oak carcass)
- 600 basin unit (oak carcass)
- Lansdown semi-countertop basin
- 300 floor cupboard (oak carcass)
- Marston mono basin mixer
- Sofia knobs x5
- Oval Verge mirror
- Filler/clad-on end panel x4
- Tall filler/clad-on end panel x2
- 1880 solid surface worktop (arctic white)
- 1500 plinth (worktop & plinth cut to size)
- Recharging station

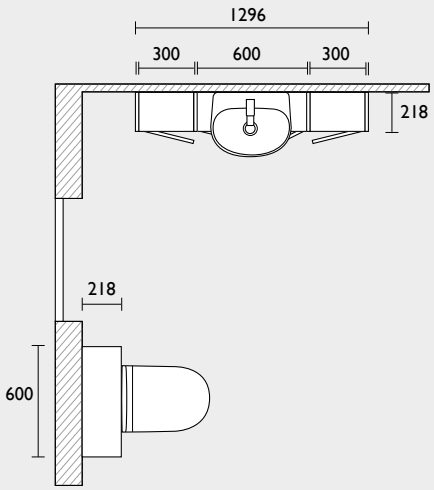

FLAX

The Legacy Collection

Swatch sample
service available
See page 96 for details

Bring a touch of creamy, warm neutrals into your space with our easy and understated Flax finish. This subtle, off-white makes the perfect neutral backdrop for any space, enabling you to add your personal touch with your choice of handles, worktop, sanitaryware and accessories. We've chosen our Micra Evo sanitaryware and Sofia handles to add a contemporary edge.

CREATE THE LOOK

Want to recreate this look for your new bathroom? We have created a handy floor plan and useful list of all the items used to design this classically styled bathroom.

Legacy - Standard Depth Furniture

- 600 back to wall WC unit
- Micra Evo back to wall WC & seat
- Vortex cistern
- Traditional dual flush plate
- 300 three drawer floor cupboard (oak carcass)
- 600 basin unit (oak carcass)
- Micra Evo semi-countertop basin
- Marston basin mixer
- Sofia knob x5
- Verge mirror
- Filler/clad-on end panel x4
- 1880 solid surface worktop (arctic white)
- 1500 plinth
  (worktop & plinth cut to size)

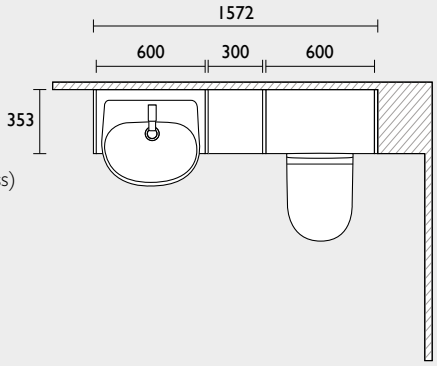

MATT DARK GREY

The Legacy Collection

Swatch sample
service available
See page 96 for details

Matt Dark Grey creates real drama and can completely transform the look of your bathroom. Teamed here with the Ion basin and Structure back to wall WC, it strikes the perfect balance between modern and traditional styling. Recreate the depth of natural stone with stunning solid surface carrara marble worktop. Complete this look with the Cheltenham basin mixer and polished Florence handles.

CREATE THE LOOK

Want to recreate this look for your new bathroom? We have created a handy floor plan and useful list of all the items used to design this classically styled bathroom.

Legacy - Standard Depth Furniture

- 600 back to wall WC unit
- Structure back to wall WC & seat
- Vortex cistern
- Oval dual flush plate
- 300 floor cupboard (oak carcass)
- 600 basin unit (oak carcass)
- Ion semi-countertop basin
- Cheltenham basin mixer
- Florence handles x3
- Verge mirror
- Filler/clad-on end panel x4
- 1880 solid surface worktop (carrara)
- 1500 plinth
  (worktop & plinth cut to size)

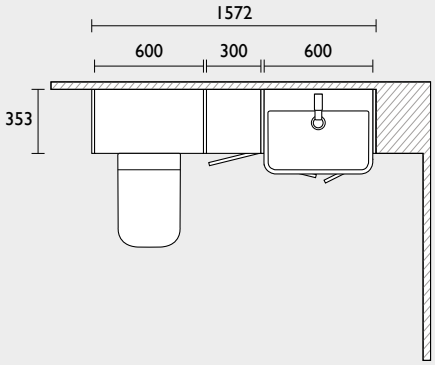

METRO GREY

The Legacy Collection

Swatch sample
service available
See page 96 for details

Metro Grey adds a touch of luxury to your bathroom and creates a relaxed and calming period bathroom look. Opt for the classically styled Vitoria sanitaryware to complete the look. We have teamed it here with Clara handles and Varsity basin taps.

CREATE THE LOOK

Want to recreate this look for your new bathroom? We have created a handy floor plan and useful list of all the items used to design this classically styled bathroom.

Legacy - Standard Depth Furniture Run

- 300 floor cupboard x2 (oak carcass)
- 600 basin unit (oak carcass)
- Vitoria semi-countertop basin
- Varsity basin taps
- 600 back to wall WC unit
- Vitoria back to wall WC & white seat
- Vortex cistern
- Traditional dual flush plate
- Clara handles x4
- Verge mirror
- 600 wall cupboard
- Filler/clad-on end panel x7
- 1880 & 680 solid surface worktop (grey quartz)
- 1500 plinth (worktop & plinth cut to size)

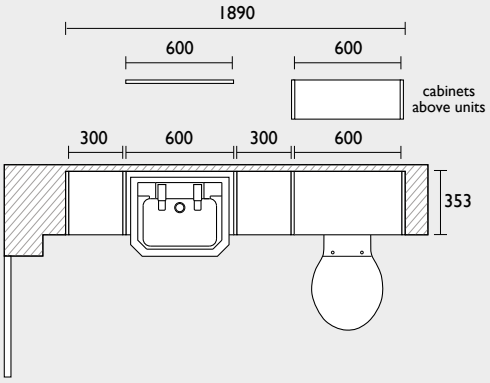

LEGACY FITTED FURNITURE MADE EASY

Tavistock fitted furniture is designed to be used in many different bathroom configurations. To make things a little easier our design experts have selected common configurations of our Legacy fitted furniture in each finish, we've helpfully bundled it together with one code and price, so you can go ahead and order without the complexity of working out which additional items you might need. All you need to do is select the left or right hand basin option and finish listed below.

Please note: The code and price does not include handles p38, WC & seat p46 - 47 concealed cistern and flush button p50 - 53 & taps p56 - 63. This allows you the opportunity to tailor the configurations to suit your style. To order these items please see the relevant pages.

Bundle

PRICE
£1,438.80

LEGACY STANDARD DEPTH 1200 FITTED FURNITURE CONFIGURATION

Legacy - 1200mm fitted furniture run (standard depth)

- 600 back to wall WC unit
- 600 basin unit
- 1240 integrated basin & worktop (left shown)
- Filler/clad-on end panel x2
- 1500 plinth (cut to size)

Finish	Left Basin	Right Basin
Mineral Blue	T3RUN12L.L.MB	T3RUN12L.R.MB
Flax	T3RUN12L.L.FX	T3RUN12L.R.FX
Matt Dark Grey	T3RUN12L.L.MDG	T3RUN12L.R.MDG
Metro Grey	T3RUN12L.L.MG	T3RUN12L.R.MG
	£1438.80	**£1438.80**

Don't forget you will need to order handles, WC & seat, taps, concealed cistern and flush button/plate to complete your furniture run
Shown with Lansdown back to wall WC & Traditional dual flush plate

Bundle

PRICE
£1,820.90

LEGACY STANDARD DEPTH 1500 FITTED FURNITURE CONFIGURATION

Legacy - 1500mm fitted furniture run (standard depth)

- 600 back to wall WC unit
- 600 basin unit
- 300 floor cupboard
- 1540 integrated basin & worktop (left shown)
- Filler/clad-on end panel x2
- 1500 plinth (cut to size)

Finish	Left Basin	Right Basin
Mineral Blue	T3RUN15L.L.MB	T3RUN15L.R.MB
Flax	T3RUN15L.L.FX	T3RUN15L.R.FX
Matt Dark Grey	T3RUN15L.L.MDG	T3RUN15L.R.MDG
Metro Grey	T3RUN15L.L.MG	T3RUN15L.R.MG
	£1820.90	**£1820.90**

Don't forget you will need to order handles, WC & seat, taps, concealed cistern and flush button/plate to complete your furniture run
Shown with Lansdown back to wall WC & Traditional dual flush plate

THE PERFECT FINISH

Unsure which finish best suits your style? Our swatch sample service is designed to help you make the right choice for your home . If you would like a sample of any of our furniture or worktops then please visit our website and fill in the sample request form.

Alternatively you will find displays of our furniture and colour samples of finishes and worktops at our specialist retailers across the UK and Ireland. To find your nearest showroom visit our website

tavistock-bathrooms.co.uk/swatches

Bundle

PRICE
£1,426.40

LEGACY SLIM DEPTH 1200 FITTED FURNITURE CONFIGURATION

Legacy - 1200mm fitted furniture run (slim depth)

- 600 back to wall WC unit
- 600 basin unit
- 1240 integrated basin & worktop (left shown)
- Filler/clad-on end panel x2
- 1500 plinth (cut to size)

Finish	Left Basin	Right Basin
Mineral Blue	T2RUN12L.L.MB	T2RUN12L.R.MB
Flax	T2RUN12L.L.FX	T2RUN12L.R.FX
Matt Dark Grey	T2RUN12L.L.MDG	T2RUN12L.R.MDG
Metro Grey	T2RUN12L.L.MG	T2RUN12L.R.MG
	£1426.40	**£1426.40**

Don't forget you will need to order handles, WC & seat, taps, concealed cistern and flush button/plate to complete your furniture run
Shown with Lansdown back to wall WC & Traditional dual flush plate

Bundle

PRICE
£1,808.50

LEGACY SLIM DEPTH 1500 FITTED FURNITURE CONFIGURATION

Legacy - 1500mm fitted furniture run (slim depth)

- 600 back to wall WC unit
- 600 basin unit
- 300 floor cupboard
- 1540 integrated basin & worktop (left shown)
- Filler/clad-on end panel x2
- 1500 plinth (cut to size)

Finish	Left Basin	Right Basin
Mineral Blue	T2RUN15L.L.MB	T2RUN15L.R.MB
Flax	T2RUN15L.L.FX	T2RUN15L.R.FX
Matt Dark Grey	T2RUN15L.L.MDG	T2RUN15L.R.MDG
Metro Grey	T2RUN15L.L.MG	T2RUN15L.R.MG
	£1808.50	**£1808.50**

Don't forget you will need to order handles, WC & seat, taps, concealed cistern and flush button/plate to complete your furniture run
Shown with Lansdown back to wall WC & Traditional dual flush plate

Wall cabinets
300 / 600

Basin units
500 / 600

Floor units
200 / 300

Back to wall units
500 / 600

Full height unit
300

The Calm Collection

Whatever your bathroom space, big or small, Calm fitted furniture offers all the flexibility and versatility you need to create a sleek and minimal aesthetic. Standard and slim depth unit options are available in the sizes shown above. Alongside floor units, a full height unit and wall cupboards there are also coordinating bath panels to complement the furniture. Complete the look of your Calm fitted furniture bathroom with your choice of worktop, handles, basin, WC and taps.

Door Finish	Carcass Finish	Door Finish Options		Carcass Finish
Gloss White	White	Mineral Blue	Matt Dark Grey	Graphite
		Gloss Light Grey	Kona	

CALM

MINERAL BLUE

The Calm Collection

Swatch sample
service available
See page 96 for details

This cool and calming Mineral Blue finish is the perfect starting point to creating a relaxing bathroom space. The minimal door style of our Calm furniture means that you can choose to keep things simple with classic chrome handles and tap, or add your own edge using black or bronze accents. Our seamless integrated basin and worktop helps complete the minimalistic look.

CREATE THE LOOK

Want to recreate this look for your new bathroom? We have created a handy floor plan and useful list of all the items used to design this contemporary styled bathroom.

Calm - Standard Depth Furniture

- 300 three drawer floor cupboard (graphite carcass)
- 600 back to wall WC unit
- Micra Evo back to wall WC & seat
- Vortex cistern
- Contactless dual flush sensor
- 600 basin unit (graphite carcass)
- 1540 integrated basin & worktop (left)
- Anthem basin mixer
- Hana handles x5 (black)
- 600 Beta mirror
- Filler/clad-on end panel x2
- 1500 plinth (cut to size)
- Anthem bath filler
- 1700 bath panel & plinth
- 700 end bath panel & plinth

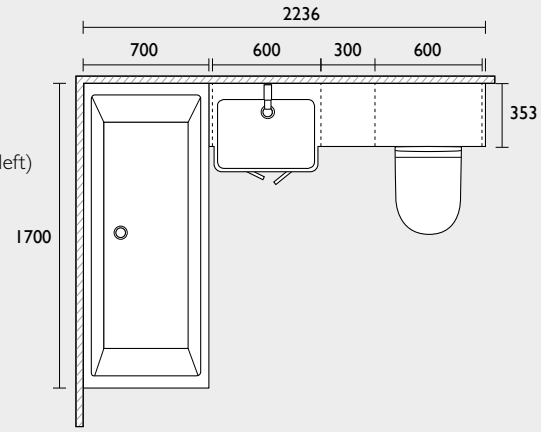

Upgrade

Add Functionality with a charging station

The subtle unit can be installed into our floor cupboards or wall cabinets and includes both a two-pin charging socket and a USB port

see page77

MATT DARK GREY

The Calm Collection

Swatch sample service available

See page 96 for details

A chic yet versatile shade, this Matt Dark Grey finish can add a touch of drama to totally transform your space. For an ultra-modern look, pair with dark accents like our Savour tap, Lucia handles and Aurora mirror, all in a stylish matt black finish.

CREATE THE LOOK

Want to recreate this look for your new bathroom? We have created a handy floor plan and useful list of all the items used to design this contemporary styled bathroom.

Calm - Slim Depth Furniture

- 600 basin unit (graphite carcass)
- Micra Evo semi-countertop basin
- Savour basin mixer (black)
- 600 back to wall WC unit
- Micra Evo back to wall WC & seat
- Vortex cistern
- Round flush button - black
- 300 tall floor cupboard (graphite carcass)
- Lucia handles x4
- 600 Aurora mirror
- Filler/clad-on end panel x1
- Tall filler/clad-on end panel x2
- 1280 solid surface worktop (arctic white)
- 1500 plinth
  (worktop & plinth cut to size)

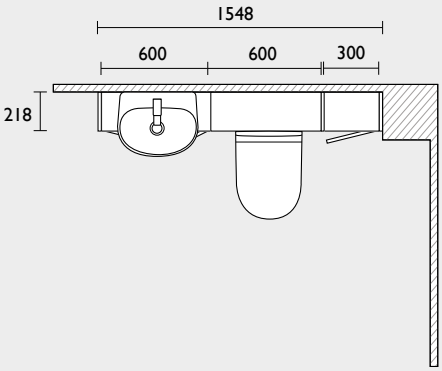

GLOSS WHITE

The Calm Collection

Swatch sample
service available
See page 96 for details

The minimal form of Calm Gloss White provides a polished and sleek look. Why not emulate hotel styling with double basin units, wall-mounted for a fresh take on fitted furniture. To keep your bathroom spa-like and clutter-free, consider adding extra storage space and opt for a 3 drawer floor unit. Contrasting matt black Hana handles complete the look.

CREATE THE LOOK

Want to recreate this look for your new bathroom? We have created a handy floor plan and useful list of all the items used to design this contemporary bathroom.

Calm - Standard Depth Furniture

- Structure wall hung WC & wrap over seat
- Vortex cistern
- 0.82 wall hung WC frame
- Circles flush plate - (black)
- 600 basin unit x2 (white carcass)
- 300 3x drawer floor unit (white carcass)
- Structure semi-countertop basin x2
- Hana black handles x7
- Anthem basin mixer- black x2
- Verge pill mirror x2
- Filler/clad-on end panel x2
- 1880 & solid surface worktop (grey quartz) (worktop cut to size)

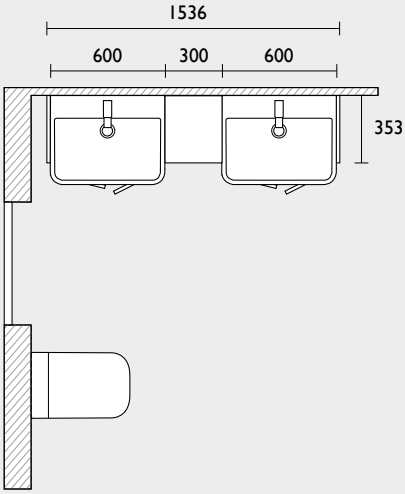

GLOSS LIGHT GREY

The Calm Collection

Swatch sample
service available
See page 96 for details

For the discerning consumer, Calm Gloss Grey with its smartly tailored clean lines cuts a refined silhouette. The simplicity of this run is what makes it the go-to solution for smaller bathrooms. Teaming it with an integrated basin and worktop and Tula handles keeps this compact run super-stylish.

CREATE THE LOOK

Want to recreate this look for your new bathroom? We have created a handy floor plan and useful list of all the items used to design this contemporary bathroom.

Calm - Standard Depth Furniture

- 600 back to wall WC unit
- Orbit back to wall WC & seat
- Vortex cistern
- Circles dual flush plate - chrome
- 600 basin unit (graphite carcass)
- Standard depth integrated basin & worktop (left hand)
- Signal basin mixer
- Tula handles x4
- 300 floor cupboard (graphite carcass) x2
- Accord 800 mirror
- Filler/clad-on end panel x4
- 680 solid surface worktop - arctic white
- 2000 plinth (worktop & plinth cut to size)

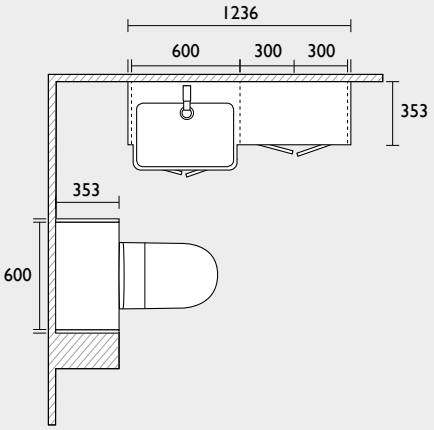

KONA

The Calm Collection

Swatch sample
service available
See page 96 for details

Where luxury and minimalism meet. This Calm Kona bathroom combines the richness of a wood finish with a contrasting slim depth integrated basin and worktop. We've chosen slim chrome Odelia handles and added coordinating bath panels for a seamless look.

CREATE THE LOOK

Want to recreate this look for your new bathroom? We have created a handy floor plan and useful list of all the items used to design this contemporary bathroom.

Calm - Slim Depth Furniture

- 1700 bath panel
- 700 end panel (bath)
- Tier bath shower mixer & handset
- 600 basin unit (graphite carcass)
- Slim depth integrated basin & worktop (left hand)
- 600 back to wall WC unit
- Structure back to wall WC & seat
- Vortex cistern
- Contactless flush sensor
- Odelia handles x2
- Tier basin mixer
- Aster mirror
- Filler/clad-on end panel x2
- 1500 plinth (worktop & plinth cut to size)

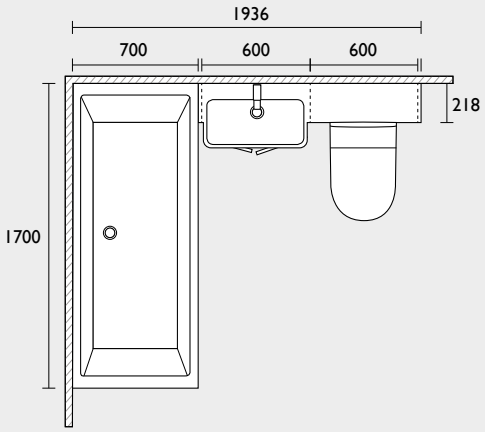

CALM FITTED FURNITURE MADE EASY

Tavistock fitted furniture is designed to be used in many different bathroom configurations. To make things a little easier our design experts have selected common configurations of our Calm fitted furniture in each finish, we've helpfully bundled it together with one code and price, so you can go ahead and order without the complexity of working out which additional items you might need. All you need to do is select the left or right hand basin option and finish listed below.

Please note: The code and price does not include handles p38, WC & seat p46 - 47 concealed cistern and flush button p50 - 53 & taps p56 - 63. This allows you the opportunity to tailor the configurations to suit your style. To order these items please see the relevant pages.

Bundle

PRICE
£1,438.80

CALM STANDARD DEPTH 1200 FITTED FURNITURE CONFIGURATION

Calm - 1200mm fitted furniture run (standard depth)

- 600 back to wall WC unit
- 600 basin unit
- 1240 integrated basin & worktop (left shown)
- Filler/clad-on end panel x2
- 1500 plinth (cut to size)

Finish	Left Basin	Right Basin
Mineral Blue	T3RUN12C.L.MB	T3RUN12C.R.MB
Matt Dark Grey	T3RUN12C.L.MDG	T3RUN12C.R.MDG
Gloss White	T3RUN12C.L.GW	T3RUN12C.R.GW
Light Grey	T3RUN12C.L.GLG	T3RUN12C.R.GLG
Kona	T3RUN12C.L.KN	T3RUN12C.R.KN
	£1438.80	**£1438.80**

Don't forget you will need to order handles, WC & seat, taps, concealed cistern and flush button/plate to complete your furniture run.
Shown with Micra Evo back to wall WC & circles flush button

Bundle

PRICE
£1,820.90

CALM STANDARD DEPTH 1500 FITTED FURNITURE CONFIGURATION

Calm - 1500mm fitted furniture run (standard depth)

- 600 back to wall WC unit
- 600 basin unit
- 300 floor cupboard
- 1540 integrated basin & worktop (left shown)
- Filler/clad-on end panel x2
- 1500 plinth (cut to size)

Finish	Left Basin	Right Basin
Mineral Blue	T3RUN15C.L.MB	T3RUN15C.R.MB
Matt Dark Grey	T3RUN15C.L.MDG	T3RUN15C.R.MDG
Gloss White	T3RUN15C.L.GW	T3RUN15C.R.GW
Light Grey	T3RUN15C.L.GLG	T3RUN15C.R.GLG
Kona	T3RUN15C.L.KN	T3RUN15C.R.KN
	£1820.90	**£1820.90**

Don't forget you will need to order handles, WC & seat, taps, concealed cistern and flush button/plate to complete your furniture run.
Shown with Micra Evo back to wall WC & circles flush button

THE PERFECT FINISH

Unsure which finish best suits your style? Our swatch sample service is designed to help you make the right choice for your home . If you would like a sample of any of our furniture or worktops then please visit our website and fill in the sample request form.

Alternatively you will find displays of our furniture and colour samples of finishes and worktops at our specialist retailers across the UK and Ireland. To find your nearest showroom visit our website

tavistock-bathrooms.co.uk/swatches

Bundle

PRICE
£1,426.40

CALM SLIM DEPTH 1200 FITTED FURNITURE CONFIGURATION

Calm - 1200mm fitted furniture run (slim depth)

- 600 back to wall WC unit
- 600 basin unit
- 1240 integrated basin & worktop (left shown)
- Filler/clad-on end panel x2
- 1500 plinth (cut to size)

Finish	Left Basin	Right Basin
Mineral Blue	T2RUN12C.L.MB	T2RUN12C.R.MB
Matt Dark Grey	T2RUN12C.L.MDG	T2RUN12C.R.MDG
Gloss White	T2RUN12C.L.GW	T2RUN12C.R.GW
Light Grey	T2RUN12C.L.GLG	T2RUN12C.R.GLG
Kona	T2RUN12C.L.KN	T2RUN12C.R.KN
	£1426.40	**£1426.40**

Don't forget you will need to order handles, WC & seat, taps, concealed cistern and flush button/plate to complete your furniture run. Shown with Micra Evo back to wall WC & circles flush button

Bundle

PRICE
£1,808.50

CALM SLIM DEPTH 1500 FITTED FURNITURE CONFIGURATION

Calm - 1500mm fitted furniture run (slim depth)

- 600 back to wall WC unit
- 600 basin unit
- 300 floor cupboard
- 1540 integrated basin & worktop (left shown)
- Filler/clad-on end panel x2
- 1500 plinth (cut to size)

Finish	Left Basin	Right Basin
Mineral Blue	T2RUN15C.L.MB	T2RUN15C.R.MB
Matt Dark Grey	T2RUN15C.L.MDG	T2RUN15C.R.MDG
Gloss White	T2RUN15C.L.GW	T2RUN15C.R.GW
Light Grey	T2RUN15C.L.GLG	T2RUN15C.R.GLG
Kona	T2RUN15C.L.KN	T2RUN15C.R.KN
	£1808.50	**£1808.50**

Don't forget you will need to order handles, WC & seat, taps, concealed cistern and flush button/plate to complete your furniture run. Shown with Micra Evo back to wall WC & circles flush button

YOUR PLANNING, CHOOSING & ORDERING GUIDE

LEGACY - CLASSIC STYLING

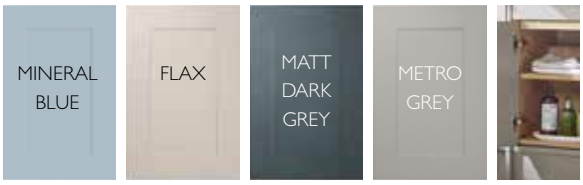

CALM - CONTEMPORARY STYLING

01 FURNITURE STYLE & FINISH

The most important choice when determining the look of your bathroom is door style and finish. Choose from the classic shaker style of Legacy or the ultra-modern simplicity of Calm slab style doors. Legacy is available in 4 finishes, whilst Clam offers 5 options. All Legacy door styles come complete with oak carcasses. Calm door styles feature a graphite carcass (except for gloss white which has a white carcass).

02 COMBINATION & DEPTH OF UNITS

Consider the available space in your bathroom and choose from either standard depth (353mm) or space-saving slim depth (218mm) units. Establish how you use your space and plan your design accordingly; whether yours is a personal retreat or a room for all the family, you can combine sizes to suit your needs and maximise the space in your bathroom.

03 HANDLE OPTIONS

Add the perfect finishing touch to your chosen doors with one of our stylish handles. See page 38 for the full range of options.

04 WORKTOP OPTIONS

Select a worktop from either our solid surface or laminate options. Alternatively opt for an integrated basin and worktop for a seamless look which works equally well with both contemporary and classic bathroom designs. See pages 39 - 41 for further details.

05 BASINS, WCs, CISTERNS, FRAMES & FLUSHING OPTIONS

Choose your preferred basin and WC to match the styling of your bathroom, in addition to a cistern and frame (if required). Complete the look by selecting from our range of flush plate options

06 TAP COLLECTION

Choose from our collection of stylish basin mixers, whether sleek and ergonomic or traditionally styled. Complete the look with a coordinating bath filler. See pages 56 - 63 for options.

07 MIRRORS & CABINETS

Choose an illuminated bathroom mirror or, for some additional over basin storage, opt for a cabinet. See pages 64 - 71 for options.

08 PANELS, PLINTHS & BATH PANELS

Clad-on end panels are available for all finishes. They can also be used between units to achieve a framed effect, which works particularly well for the traditional Legacy range. Plinths are available to create a fully integrated floor mounted look.

Alternatively you can wall mount your furniture, should you wish to create a more contemporary styled bathroom. See pages 81-82.

Finally, choose your bath panel to keep everything coordinated. See page 82.

HANDLES

Sleek, contemporary & modern classic designs

Choose the handle that best reflects your chosen bathroom style;
whether it's curved and rounded or sleek and contemporary,
See page 78 for full product details.

Sofia Bronze

Maya Chrome

Maya Brass

Hana Chrome

Hana Black

Hana Brass

Florence Chrome

Florence Burnished Copper

Malin Chrome

Tula Chrome

Clara Chrome

Cecily Chrome

Lucia Chrome

Lucia Black

Adela Chrome

Odelia Chrome
available in 4 sizes
197 | 247 | 297 | 397mm

Cecily Burnished Copper

INTEGRATED BASINS & WORKTOPS

Strike the perfect balance between form & function

Expertly moulded into a single piece, our Isocast basins with integrated worktop strike the perfect balance between form and function. This clean and seamless look works equally well with both classic and contemporary bathroom designs.

Integrated basin and worktops are available in standard or slim depths and left or right handed options to suit your plan.

1240mm Standard Depth - Left

1240mm Standard Depth - Right

1240mm Slim Depth - Left

1240mm Slim Depth - Right

1540mm Standard Depth - Left

1540mm Standard Depth - Right

1540mm Slim Depth - Left

1540mm Slim Depth - Right

SOLID SURFACE WORKTOPS

Natural stone-like finish

Our range of solid surface worktops combines a seamless style with the look and feel of real stone. The natural stone-like beauty of the solid surface finish makes them a perfect choice for your bathroom.

Solid surface worktops are completely solid and can be easily cut to whatever size or shape your bathroom demands, with no need to bond on finishing strips. Simply cut to the desired profile and sand the edges to a fine finish. Adhesive is also available for joining longer runs or corner installations.

Arctic White

Grey Quartz

Carrara

Stone Grey

Starlight

LAMINATE WORKTOPS

High quality & durable

Choose from our range of high quality, durable laminate surfaces. Specifically chosen to complement our range of door finishes. A little inspiration will allow you to use the worktops in imaginative ways to create either a more traditionally styled or distinctly contemporary look.

White

Black Granite

Riven Slate

Isadora Stone

OUR BASIN & WC STYLES

Something for everyone...

The Basin & WC Collection

Clean lines, sleek surfaces, forward-looking design. That's what you get with our collection of basins and WCs. Whatever your personal style, you'll find something to inspire you. Specifically designed to work with our ranges of fitted furniture; including back to wall and wall hung WCs as well as semi-countertop basin options available in a choice of standard or slim depth depending on your installation.

Basin & WC Options
Read our simple guide to help you make the right decision.

Semi-Countertop Basins
A semi-countertop basin is a basin mounted on a furniture unit or worktop. While the rear half of the basin is recessed, the front of the basin overhangs the unit. The result? A basin which doesn't impose on your bathroom space. Available in a variety of sizes and styles.

Back to Wall WCs
Why not opt for a back to wall WC? With the cistern hidden inside a back to wall WC unit or behind a wall, it creates a clean and streamlined look. This style of WC is also perfect for when space is at a premium in your bathroom. Browse the following pages and choose from our extensive range.

Wall Hung WCs & Frames
A wall hung WC is a WC which hangs on the wall, or a back to wall WC unit, supported by a specially designed WC frame. Wall hung WCs are the perfect choice when you are looking for a space-saving solution or a very clean, contemporary look.

Cisterns & Flushing Options
Tavistock has a number of WC cistern options for all types of installation. See page 50 for our detailed guide. Alongside these, we offer a wide variety of flush options. See pages 51-53 for our complete range.

SEMI-COUNTERTOP BASINS

Browse our selection of semi-countertop basins to find the perfect option for your bathroom. Our collection includes both contemporary and classic designs, with the option of standard and slim depth basins, giving you plenty of choice no matter which fitted furniture range you decide on.

SEMI-COUNTERTOP BASINS - STANDARD DEPTH

Vitoria - 1 Tap Hole
Semi-Countertop Basin
550(w) x 195(h) x 435(d)mm

Basin	SCSB850S	£232.00

Vitoria - 2 Tap Holes
Semi-Countertop Basin
550(w) x 195(h) x 435(d)mm

Basin	SCDB850S	£232.00

Lansdown - 1 Tap Hole
Semi-Countertop Basin
490(w) x 140(h) x 420(d)mm

Basin	DC14047	£239.50

Lansdown - 2 Tap Holes
Semi-Countertop Basin
490(w) x 140(h) x 420(d)mm

Basin	DC14048	£239.50

Orbit
Semi-Countertop Basin
560(w) x 130(h) x 450(d)mm

Basin	DC14004	£205.00

Q60
Semi-Countertop Basin
515(w) x 160(h) x 430(d)mm

Basin	G3SCBAS	£235.00

Q60
Semi-Countertop Basin*
500(w) x 105(h) x 405(d)mm

Basin	G3SCBAS50	£220.00

Loft / Micra Evo
Semi-Countertop Basin
475(w) x 150(h) x 420(d)mm

Basin	DC14029	£195.00

Vibe
Semi-Countertop Basin
550(w) x 185(h) x 430(d)mm

Basin	SCSB700S	£212.50

Aerial
Semi-Countertop Basin
560(w) x 155(h) x 430(d)mm

Basin	DC14002	£211.00

Structure
Semi-Countertop Basin
550(w) x 170(h) x 430(d)mm

Basin	SCSB453S	£235.00

SEMI-COUNTERTOP BASINS - SLIM DEPTH

Lansdown Slim Depth
Semi-Countertop Basin - 1 Tap Hole
490(w) x 140(h) x 370(d)mm

Basin	DC14045	£215.50

Lansdown Slim Depth
Semi-Countertop Basin - 2 Tap Holes
490(w) x 140(h) x 370(d)mm

Basin	DC14046	£215.50

Aerial Slim Depth
Semi-Countertop Basin
560(w) x 145(h) x 355(d)mm

Basin	DC14003	£192.50

Structure Slim Depth
Semi-Countertop Basin
550(w) x 170(h) x 330(d)mm

Basin	SCSB452S	£223.50

Orbit Slim Depth
Semi-Countertop Basin
540(w) x 145(h) x 385(d)mm

Basin	DC14005	£186.00

Q60 Slim Depth
Semi-Countertop Basin
540(w) x 160(h) x 300(d)mm

Basin	G2SCBAS	£220.50

Loft / Micra Evo Slim Depth
Semi-Countertop Basin
475(w) x 150(h) x 390(d)mm

Basin	DC14028	£167.50

* Suitable for use with 500mm width basin units

BACK TO WALL WCs

Why not take a look at our extensive range of back to wall WCs to find the perfect option for your bathroom. Our collection includes both contemporary and classic designs, giving you plenty of choice no matter which fitted furniture range you decide on. Comfort height WCs are several centimetres taller than standard height WCs, ideal for taller or elderly users.

BACK TO WALL WCs

*Seat also available in linen white & matt dark grey, see page 86 for further details

Vitoria Back To Wall WC
Floor fixings included
385(w) x 410(h) x 520(d)mm

Pan	BTW850S	£293.00
Seat - white*	TS850WSC	£142.00
		£435.00

Lansdown Back To Wall WC
Concealed floor fixings
350(w) x 380(h) x 510(d)mm

Pan	DC14044	£328.00
Seat	DC14037	£85.30
		£413.30

Structure 515 Back To Wall WC
Concealed floor fixings
345(w) x 395(h) x 515(d)mm

Pan	BTW450S	£290.00
Seat	TS450S	£85.30
		£375.30

Structure 475 Back To Wall WC
Concealed floor fixings
345(w) x 395(h) x 475(d)mm

Pan	BTW475S	£238.00
Seat	TS450S	£85.30
		£323.30

Orbit Back To Wall WC
Concealed floor fixings
365(w) x 410(h) x 565(d)mm

Pan	BTW250S	£332.00
Seat	TS250S-SF	£93.10
		£425.10

Micra Evo Back To Wall WC
Concealed floor fixings
365(w) x 410(h) x 490(d)mm

Pan	BTW950S	£213.70
Seat	DC14037	£85.30
		£299.00

Vibe Back To Wall WC
Concealed floor fixings
355(w) x 405(h) x 540(d)mm

Pan	BTW700XS	£317.00
Seat	TS700S	£85.90
		£402.90

Loft Back To Wall WC
Concealed floor fixings
355(w) x 390(h) x 460(d)mm

Pan	DC14026	£238.00
Seat	DC14030	£120.50
		£358.50

COMFORT HEIGHT BACK TO WALL WCs

Aerial Comfort Height Back To Wall WC
Concealed floor fixings
380(w) x 460(h) x 505(d)mm

Pan	BTWC650S	£319.00
Seat	TS650S	£96.90
		£415.90

Structure Comfort Height Back To Wall WC
Concealed floor fixings
345(w) x 460(h) x 515(d)mm

Pan	BTWC450S	£318..00
Seat	TS451S	£85.30
		£403.30

Loft Comfort Height Back To Wall WC
Concealed floor fixings
370(w) x 460(h) x 490(d)mm

Pan	DC14027	£296.00
Seat	O803SC-SF	£52.30
		£348.30

WALL HUNG WCs & FRAMES

For those seeking a contemporary space saving solution, why not opt for a wall hung WC?
Don't forget to select a suitable wall hung WC frame and flush button.

WALL HUNG WCs

Aerial Wall Hung WC
Frame hole centres are 180mm
380(w) x 330(h) x 495(d)mm

Pan	WH650S	**£332.00**
Seat	TS650S	**£96.90**
		£428.90

Structure Wall Hung WC
Frame hole centres are 180mm
340(w) x 322(h) x 505(d)mm

Pan	WH450S	**£330.00**
Seat	TS451S	**£85.30**
		£415.30

Orbit Wall Hung WC
Frame hole centres are 180mm
365(w) x 345(h) x 510(d)mm

Pan	WH250S	**£375.00**
Seat	TS250S-SF	**£93.10**
		£468.10

Secure-Fix QR

Vibe Wall Hung WC
Frame hole centres are 180mm
360(w) x 320(h) x 535(d)mm

Pan	WH700XS	**£317.00**
Seat	TS700S	**£85.90**
		£402.90

Micra Evo Wall Hung WC
Frame hole centres are 180mm
360(w) x 320(h) x 510(d)mm

Pan	WH250S	**£375.00**
Seat	DC14037	**£85.30**
		£460.30

Loft Wall Hung WC
Frame hole centres are 180mm
370(w) x 355(h) x 490(d)mm

Pan	PWHPAN	**£320.00**
Seat	O803SC-SF	**£52.30**
		£372.30

Secure-Fix QR

Available Summer 2022

CONCEALED CISTERNS & WALL HUNG FRAMES

FLUSH PLATE OPTIONS PAGE 52

1.17m Wall Hung WC Frame
500(w) x 1168(h) x 140-200(d)mm

Frame	TR9006	**£300.00**

6/3 litres
Use for in-wall applications.
Includes fittings. Requires flush plate/ button or contactless sensor (available separately). 200mm height adjustment.

1.0m Wall Hung WC Frame
500(w) x 1000(h) x 167-215(d)mm

Frame	TR9015	**£300.00**

6/3 litres
Ideal for boxed in applications, especially under windows.
Requires flush plate/button or contactless sensor (available separately).
200mm height adjustment.

0.82m Wall Hung WC Frame
500(w) x 820(h) x 167-215mm(d)

Frame	TR9005	**£300.00**
Adaptor	TR9007	**£51.40**

6/3 litres
Can be used with 600mm & wider furniture WC units
Use with Furniture Adaptor Kit, requires flush plate/button, or contactless sensor (available separately). 200mm height adjustment.

0.4m Wall Hung Half Height Frame
400(w) x 400(h) x 170-335(d)mm

Frame	TR9018	**£139.00**

Compact half height WC frame suitable for use in narrow back to wall units including 500mm wide.
For use with Vortex, Apex or Comfort height cisterns. Can also be used for bidets. 200mm height adjustment.

Use with the comfort height cistern to allow wall hung pans to be set at a higher position.

WALL HUNG WC FRAME COMPATIBILITY CHART FOR FURNITURE SIZE / INSTALLATION TYPE

Flushing Solution	Std Depth 500 BTW Unit	Std Depth 600 BTW Unit	Slim Depth 500 BTW Unit	Slim Depth 600 BTW Unit	Boxed/tiled-in with worktop	Boxed/tiled-in full height	Boxed/tiled-in full height - slim stud wall
1.17m Wall Hung WC Frame						•	•
1.0m Wall Hung WC Frame					•	•	
0.82m Wall Hung WC Frame		•*		•*	•	•	
0.4 Wall Hung Half Height Frame (Use with comfort height cistern if a higher WC height is desired)	•Δ	•Δ	•Δ	•Δ	•Δ		

*Use with adaptor kit TR9007 Δ Use with Vortex, Apex or Comfort Height cistern, see page 50

Vortex Cistern - Bottom Inlet
with chrome flush button
434(w) x 365(h) x 135(d)mm

Cistern	VOR790	**£121.00**

6/3 litres

Bottom entry inlet valve
Top or front flush plate mounting
½ BSP
PS insulation jacket
Pneumatic flush valve

Apex Cistern - Side Inlet
with chrome flush button
464(w) x 365(h) x 135(d)mm

Cistern	TR9002	**£121.00**

6/3 litres
Side entry side entry inlet valve
Top or front flush plate mounting
½ BSP
PS insulation jacket,
Pneumatic flush valve

Comfort Height Cistern
with chrome flush button
437(w) x 324(h) x 165(d)mm

Cistern	TR9008	**£121.00**

6/3 litres
Developed specifically to allow comfort height back to wall pans to be used in 820mm high furniture
Bottom entry inlet valve
Top or front flush plate mounting
½ BSP
PS insulation jacket,
Pneumatic flush valve

In-Wall Cistern
600(w) x 754max(h) x 138-194(d)mm

Cistern	TR9009	**£137.50**

6/3 litres.
Ideal for tiled in applications, all parts serviceable through flush plate aperture
Internal isolation valve
150mm height adjustment
Top or front flush plate mounting
½ BSP
PS insulation jacket
Requires flush plate/button or contactless sensor (available separately)

OPTIONAL UPGRADES FOR CONCEALED CISTERNS

Round Flush Buttons
ø75mm
Also compatible with wall hung WC frames

Black - TR9022	**£21.40**
Brushed Brass - TR9034	**£42.80**

Square Flush Buttons
71(w) x 71(h)mm
Also compatible with wall hung WC frames

Black - TR9028	**£21.40**
Brushed Brass - TR9035	**£42.80**
Chrome - TR9003	**£17.10**

Oval Flush Button Chrome
140(w) x 80(h)mm
Larger flush interface, easy to install, template supplied

Button - TR9023	**£58.50**

CONTACTLESS DUAL FLUSH SENSOR

The contactless flush sensor kit is compatible with our pneumatic concealed cisterns, and is best used within furniture. It provides a touchless flush, with just a wave of a hand.

The Sensor works using capacitive sensor technology to detect a change in the electromagnetic field. A short wave of the hand in front of the sensor activates the reduced flush, whilst holding your hand slightly longer triggers a full flush. It is powered by 4 AA batteries which will last around a year under normal domestic conditions.

The sensor can be mounted behind a back to wall WC unit fascia, or under a worktop or tiled wall near the cistern. A discreet decal is included to indicate sensor location if desired.

FEATURES INCLUDE:

- Dual flush
- Provides a touchless flush with just a wave of the hand
- Best used with concealed cisterns in furniture
- Powered by 4x AA batteries
- Low battery alarm

Sensor - TR9014

£147.50

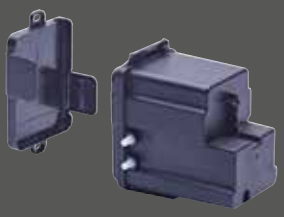

TAKE A LOOK....

See how the contactless dual flush sensor works

*Normal domestic conditions, good quality batteries

BACK TO WALL WC CISTERN COMPATIBILITY CHART FOR FURNITURE SIZE / INSTALLATION TYPE

Application	Std Depth 500 BTW Unit	Std Depth 600 BTW Unit	Slim Depth 500 BTW Unit	Slim Depth 600 BTW Unit	Boxed/tiled in with worktop	Boxed/ tiled-in full height	Boxed/ tiled-in full height - slim stud wall
Vortex Cistern - Bottom Inlet	•	•	•	•			
Apex Cistern - Side Inlet	•	•	•	•			
Comfort Height Cistern (for use with comfort height BTW WCs)	•	•	•	•			
In-Wall Cistern					•	•	•

FLUSH PLATES

Complete the look with a flush plate to suit your design.
Compatible for use with our wall hung frames or as an optional upgrade for cisterns.

ANTI FINGERPRINT

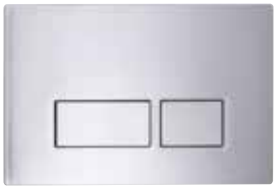

Square Flush Plate - Chrome
210(w) x 137(h)mm
Flush Plate - TR9010 **£46.30**

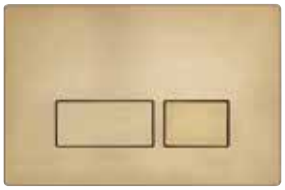

Square Flush Plate - Brushed Brass
210(w) x 137(h)mm
Flush Plate - TR9036 **£92.50**

Square Flush Plate - Black
210(w) x 137(h)mm
Flush Plate - TR9020 **£56.80**

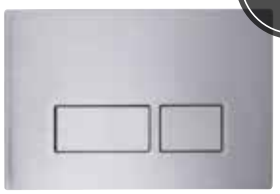

Square Flush Plate - Stainless Steel
210(w) x 137(h)mm
Flush Plate - TR9019 **£110.00**

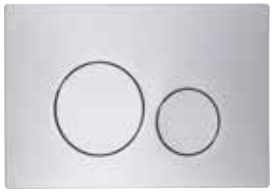

Circles Flush Plate - Chrome
210(w) x 137(h)mm
Flush Plate - TR9012 **£46.30**

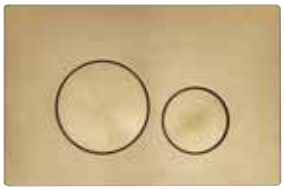

Circles Flush Plate - Brushed Brass
210(w) x 137(h)mm
Flush Plate - TR9037 **£92.50**

Circles Flush Plate - Black
210(w) x 137(h)mm
Flush Plate - TR9021 **£56.80**

Traditional Flush Plate - Chrome
210(w) x 137(h)mm
Flush Plate - TR9017 **£53.30**

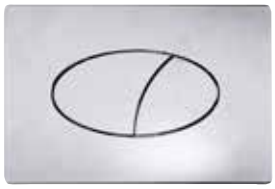

Ellipse Flush Plate - Chrome
210(w) x 142(h)mm
Flush Plate - TR9004 **£46.30**

Glass Flush Plate - Black
210(w) x 137(h)mm
Flush Plate - TR9030 **£134.00**

FLUSHING OPTIONS COMPATIBILITY CHART

Product	Code	Square TR9010/TR9037 TR9020/TR9019	Circles TR9012/TR9036 TR9030/TR9021	Traditional TR9017	Ellipse TR9004	Square button TR9003/TR9028/TR9035 Round Button TR9022/TR9034	Oval button TR9023	Contactless Sensor TR9014	Sensor TR9016 TR2025
1.17m wall hung WC frame	TR9006	●	●	●	●	● *	● *	● *	●
1.0m wall hung WC frame	TR9015	●	●	●	●	● *	● *	● *	●
0.82m wall hung WC frame	TR9005	●	●	●	●	● *	● *	● *	●
In-wall cistern	TR9009	●	●	●	●	● *	● *	● *	●
Comfort height cistern Δ	TR9008	● +	● +	● +	● +	●	● +	●	● +
Vortex cistern Δ	VOR790	●	●	●	●	●	●	●	● +
Apex cistern Δ	TR9002	●	●	●	●	●	●	●	● +

Δ Round button supplied with cistern as standard *Compatible, so long as provision made for maintenance access
+ Compatible when used in standard depth furniture only

TAKE A LOOK....

See how the sensor flush plates operate

SENSOR FLUSH PLATE

CONTACTLESS DUAL FLUSH SENSOR PLATE

Place your hand in front of the black glass-fronted flush plate to activate either a reduced or full flush. Recommended for in-wall installations.

FEATURES INCLUDE:

- Contactless flushing
- Powered by 4x AA batteries (easy to change, no tools required)
- Low battery power alarm (battery life in excess of 1 year)*
- Dual flush
- Manual override flush
- Illuminates on operation
- Use on wall hung frames & In-wall cisterns (not compatible with slim depth furniture)

Contactless Dual Flush Sensor Plate
Black
210(w) x 137(h)mm

Flush Plate - TR9025 **£165.00**

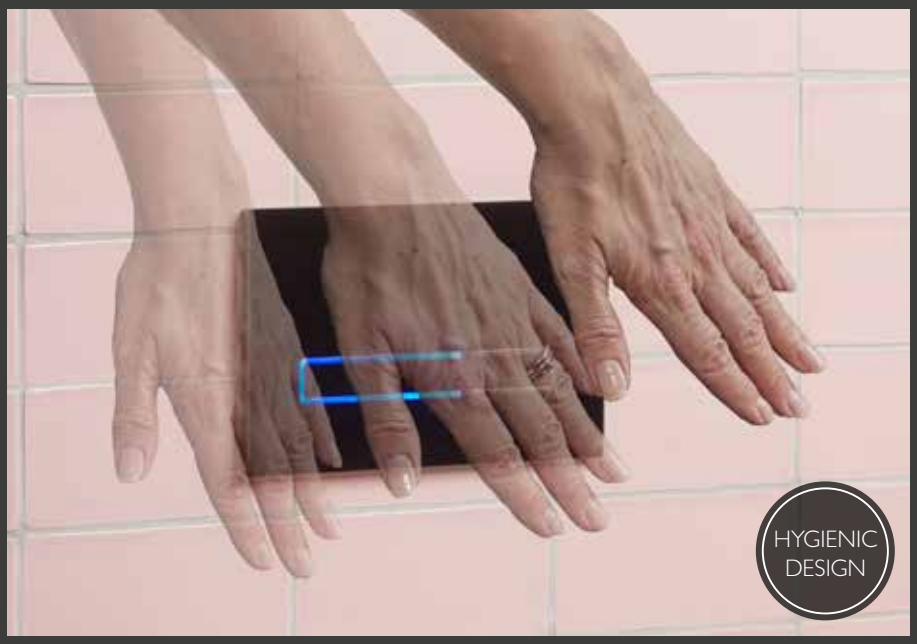

TOUCH OPERATED DUAL FLUSH SENSOR PLATE

The lightest touch of the black glass-fronted flush plate is all that is required to initiate the flush, and the plate lights up to indicate activation. Recommended for furniture or lower height installations.

FEATURES INCLUDE:

- Touch operated
- Powered by 4x AA batteries (easy to change, no tools required)
- Low battery power alarm (battery life in excess of 1 year)*
- Dual flush
- Manual override flush
- Illuminates on operation
- Use on wall hung frames & In-wall cisterns (not compatible with slim depth furniture)

Touch Operated Dual Flush Sensor Plate
Black
210(w) x 137(h)mm

Flush Plate - TR9016 **£165.00**

*Normal domestic conditions, good quality batteries

OUR TAP STYLES

Something for everyone...

The Tap Collection

Taps are no longer just a minor detail, they're the finishing touch. Our collection of taps are expertly designed and manufactured. The right tap choice must combine the two key ingredients of design and functionality, and with this in mind we have designed a collection of taps which delivers both. There is something to suit all bathroom styles, from sleekly contemporary to charmingly traditional.

Basin Mixers
A tap which mixes hot and cold water from a single spout. Ceramic cartridge technology gives smooth, easy to use action and accurate flow control.

Mini Basin Mixers
A smaller style basin mixer specifically designed for use with smaller bathroom or cloakroom basins.

Basin Taps
Two taps for separate control of hot and cold water.

Bath Fillers
A deck mounted bath tap with two handles to mix hot and cold water from a single spout.

Bath Shower Mixers
A deck mounted bath filler which also includes a shower handset. Really useful for washing hair or cleaning the bath.

THE ANTHEM COLLECTION

Anthem's round design with simple, straight handles makes for a effortlessly contemporary tap range. Available in chrome, black and brushed brass.

Anthem Basin Mixer with Click Waste
Minimum recommended pressure 0.2bar
42(w) x x158(h) x 136(d)mm

Chrome	TAN11	**£120.00**
Black	TAN1103	**£140.00**
Brushed Brass	TAN1104	**£175.00**

Anthem Mini Basin Mixer with Click Waste
Minimum recommended pressure 0.2bar
42(w) x 143(h) x 136(d)mm

Chrome	TAN61	**£115.00**
Black	TAN6103	**£135.00**
Brushed Brass	TAN6104	**£170.00**

Anthem Bath Filler
Minimum recommended pressure 0.2bar
180(w) x 126(h) x 140(d)mm

Chrome	TAN32	**£200.00**
Black	TAN3203	**£225.00**
Brushed Brass	TAN3204	**£275.00**

Anthem Bath Shower Mixer & Handset
Minimum recommended pressure 0.2bar
180(w) x 126(h) x 140(d)mm

Chrome	TAN42	**£250.00**
Black	TAN4203	**£275.00**
Brushed Brass	TAN4204	**£350.00**

Anthem Wall Mounted Basin Mixer
Minimum recommended pressure 0.2bar
160(w) x 120(h) x 180(d)mm

Chrome	TAN19	**£135.00**

Anthem Bath Filler - Black

Anthem Basin Mixer - Brushed Brass

THE SAVOUR COLLECTION

With subtle curves and an easy to hold flat top handle, Savour shows off the best in modern tap design. Available in chrome and black.

Savour Basin Mixer with Click Waste
Minimum recommended pressure 0.2bar
52(w) x 132(h) x 133(d)mm

Chrome	TSV11	**£135.00**
Black	TSV1103	**£145.00**

Savour Mini Basin Mixer with Click Waste
Minimum recommended pressure 0.2bar
52(w) x 114(h) x 127(d)mm

Chrome	TSV61	**£125.00**
Black	TSV6103	**£135.00**

Savour Bath Filler
Minimum recommended pressure 0.2bar
225(w) x 109(h) x 150(d)mm

Chrome	TSV32	**£200.00**
Black	TSV3203	**£225.00**

Savour Bath Shower Mixer & Handset
Minimum recommended pressure 0.2bar
225(w) x 109(h) x 150(d)mm

Chrome	TSV42	**£250.00**
Black	TSV4203	**£275.00**

THE HAZE COLLECTION

Sometimes the simplest things are the best. Haze's softly rounded square body flows seamlessly into a flat spout to create a tap for today's minimalist. Available in chrome and black.

Haze Basin Mixer with Click Waste
Minimum recommended pressure 0.2bar
52(w) x 132(h) x 133(d)mm

Chrome	THZ11	**£133.00**
Black	THZ1103	**£157.00**

Haze Mini Basin Mixer with Click Waste
Minimum recommended pressure 0.2bar
52(w) x 114(h) x 127(d)mm

Chrome	THZ61	**£121.00**
Black	THZ6103	**£135.00**

Haze Bath Filler
Minimum recommended pressure 0.2bar
225(w) x 109(h) x 150(d)mm

Chrome	THZ32	**£195.00**
Black	THZ3203	**£200.00**

Haze Bath Shower Mixer & Handset
Minimum recommended pressure 0.2bar
225(w) x 109(h) x 150(d)mm

Chrome	THZ42	**£237.50**
Black	THZ4203	**£275.00**

Savour Basin Mixer - Chrome

Haze Mini Basin Mixer - Black

Avid Mini Basin Mixer - Black

Zero Mini Basin Mixer - Chrome

THE AVID COLLECTION

Sweeping lines, an ergonomic handle and a sleekly curved spout, makes Avid a pleasure to use.

Avid Basin Mixer with Click Waste
Minimum recommended pressure 0.2bar
52(w) x 130(h) x 139(d)mm

Chrome	TAV11	**£121.00**
Black	TAV1103	**£145.00**

Avid Mini Basin Mixer with Click Waste
Minimum recommended pressure 0.2bar
52(w) x 110(h) x 130(d)mm

TAV61 **£108.50**

Avid Bath Filler
Minimum recommended pressure 0.2bar
222(w) x 107(h) x 148(d)mm

TAV32 **£171.00**

Avid Bath Shower Mixer & Handset
Minimum recommended pressure 0.2bar
222(w) x 107(h) x 148(d)mm

TAV42 **£212.50**

THE ZERO COLLECTION

Strong yet stylish, Zero embodies simplicity and practical good looks.

Zero Basin Mixer with Click Waste
Minimum recommended pressure 0.2bar
52(w) x 137(h) x 138(d)mm

Chrome - TZE11	**£121.00**
Black - TZE1103	**£145.00**

Zero Mini Basin Mixer with Click Waste
Minimum recommended pressure 0.2bar
52(w) x 117(h) x 130(d)mm

TZE61 **£108.50**

Zero Bath Filler
Minimum recommended pressure 0.2bar
225(w) x 109(h) x 152(d)mm

TZE32 **£171.00**

Zero Bath Shower Mixer & Handset
Minimum recommended pressure 0.2bar
225(w) x 109(h) x 152(d)mm

TZE42 **£212.50**

THE ADAPT COLLECTION

Familiarise yourself with the soft, angular design of the Adapt range.
Its shapely form and tapered body offer a new take on geometric styling.

Basin Mixer with Click Waste
Min recommended pressure 0.3bar
50(w) x 136(h) x 135(d)mm
TAD11 **£132.00**

Bath Filler
Min recommended pressure 0.3bar
230(w) x 130(h) x 160(d)mm
TAD32 **£201.50**

Bath Shower Mixer & Handset
Min recommended pressure 0.3bar
230(w) x 130(h) x 160(d)mm
TAD42 **£234.50**

THE TIER COLLECTION

Let the Tier tap take your bathroom to another level, with its softly rounded body and ergonomic handle. Understated cool combined with practicality.

Basin Mixer with Click Waste
Min recommended pressure 0.3bar
50(w) x 140(h) x 140(d)mm
TTR11 **£132.00**

Bath Filler
Min recommended pressure 0.3bar
230(w) x 135(h) x 165(d)mm
TTR32 **£201.50**

Bath Shower Mixer & Handset
Min recommended pressure 0.3bar
230(w) x 135(h) x 165(d)mm
TTR42 **£234.50**

Adapt Basin Mixer

Haze Basin Mixer

THE SIGNAL COLLECTION

Softened square styling Signal adds a designer edge that will fit into any contemporary styled bathroom.

Basin Mixer with Click Waste
Min recommended pressure 0.3bar
50(w) x 161(h) x 156(d)mm
TGN11 **£177.50**

Mini Basin Mixer with Click Waste
Min recommended pressure 0.3bar
50(w) x 135(h) x 145(d)mm
TGN61 **£132.00**

Bath Filler
Min recommended pressure 0.3bar
227(w) x 119(h) x 166(d)mm
TGN32 **£285.00**

Bath Shower Mixer & Handset
Min recommended pressure 0.3bar
230(w) x 120(h) x 160(d)mm
TGN42 **£318.00**

THE REVIVE COLLECTION

Let the elegant profile of Revive breathe some life into your bathroom design.

Basin Mixer with Click Waste
Min recommended pressure 0.2bar
127(w) x 120(h) x 141(d)mm
TRV11 **£123.50**

Bath Filler
Min recommended pressure 0.2bar
240(w) x 170(h) x 180(d)mm
TRV32 **£155.50**

Bath Shower Mixer & Handset
Min recommended pressure 0.2bar
230(w) x 136(h) x 180(d)mm
TRV42 **£215.00**

THE STRIKE COLLECTION

Strike's tapered body is echoed in its slim lever handle to create a simple yet discerning look for your bathroom. Sure to be the next design classic.

Basin Mixer with Click Waste
Min recommended pressure 0.2bar
45(w) x 155(h) x 160(d)mm
TSE11 **£144.00**

Mini Basin Mixer with Click Waste
Min recommended pressure 0.2bar
45(w) x 140(h) x 140(d)mm
TSE61 **£127.50**

Bath Filler
Min recommended pressure 0.2bar
225(w) x 140(h) x 165(d)mm
TSE32 **£231.50**

Bath Shower Mixer & Handset
Min recommended pressure 0.3bar
225(w) x 140(h) x 165(d)mm
TSE42 **£299.00**

Strike Basin Mixer

Signal Basin Mixer

THE SIREN COLLECTION

Siren cleverly combines mirror flat surfaces and super smooth curves to stunning effect. The elegant profile screams urban sophistication and delivers a big impact.

Basin Mixer with Click Waste
Min recommended pressure 0.2bar
50(w) x 167(h) x 165(d)mm
TSN11 **£182.50**

Mini Basin Mixer with Click Waste
Min recommended pressure 0.2bar
48(w) x 128(h) x 151(d)mm
TSN61 **£171.50**

Bath Filler
Min recommended pressure 0.1bar
230(w) x 123(h) x 159(d)mm
TSN32 **£277.00**

Bath Shower Mixer & Handset
Min recommended pressure 0.3bar
230(w) x 123(h) x 159(d)mm
TSN42 **£324.00**

THE BLAZE COLLECTION

Despite its hot name, Blaze is the epitome of all things cool – all the way from its contemporary clean body lines, to the sleek, lean spout.

Basin Mixer with Click Waste
Min recommended pressure 0.2bar
50(w) x 145(h) x 143(d)mm
TBL11 **£182.50**

Mini Basin Mixer with Click Waste
Min recommended pressure 0.2bar
45(w) x 122(h) x 128(d)mm
TBL61 **£171.50**

Bath Filler
Min recommended pressure 0.1bar
230(w) x 123(h) x 148(d)mm
TBL32 **£277.00**

Bath Shower Mixer & Handset
Min recommended pressure 0.3bar
230(w) x 123(h) x 148(d)mm
TBL42 **£324.00**

Cheltenham Basin Mixer

Varsity tap detail

THE CHELTENHAM COLLECTION

Cheltenham combines a traditional look with contemporary styling.
It complements the Legacy furniture range perfectly.

Basin Mixer with Click Waste
Min recommended pressure 0.2bar
169(w) x 210(h) x 176(d)mm

TCM11 **£186.00**

Basin Taps without waste (pair)
Min recommended pressure 0.2bar
65(w) x 140(h) x 115(d)mm

TCM70 **£132.00**

Bath Filler
Min recommended pressure 0.3bar
233(w) x 154(h) x 157(d)mm

TCM32 **£285.00**

Bath Shower Mixer & Handset
Min recommended pressure 0.3bar
245(w) x 150(h) x 170(d)mm

TCM42 **£318.00**

THE VARSITY COLLECTION

Varsity effortlessly captures a bygone era with its
traditionally styled handles and attention to detail.

Basin Mixer with Pop Up Waste
Min recommended pressure 0.1bar
190(w) x 100(h) x 140(d)mm

TVA10 **£150.50**

Basin Taps (pair)
Min recommended pressure 0.1bar
48(w) x 123(h) x 132(d)mm

TVA70 **£86.90**

Bath Filler
Min recommended pressure 0.1bar
235(w) x 132(h) x 200(d)mm

TVA32 **£191.00**

Bath Shower Mixer & Handset
Min recommended pressure 0.1bar
235(w) x 270(h) x 200(d)mm

TVA42 **£324.00**

THE ASHMORE COLLECTION

Ashmore features terminal-ball crosshead detailing and an elegant chrome finish.

Basin Mixer with Click Waste
Min recommended pressure 0.2bar
182(w) x 192(h) x 162(d)mm

TAM11 **£137.50**

Basin Taps without waste (pair)
Min recommended pressure 0.2bar
48(w) x 110(h) x 130(d)mm

TAM70 **£114.00**

Bath Filler
Min recommended pressure 0.1bar
238(w) x 200(h) x 214(d)mm

TAM32 **£269.00**

Bath Shower Mixer & Handset
Min recommended pressure 0.3bar
237(w) x 375(h) x 214(d)mm

TAM42 **£359.00**

THE MARSTON COLLECTION

One part classic, one part contemporary, Marston is a timeless collection of bathroom taps and brassware that features lever detailing and a chrome finish.

Basin Mixer with Click Waste
Min recommended pressure 0.2bar
153(w) x 196(h) x 162(d)mm

TMS11 **£137.50**

Marston Mono Basin Mixer
Minimum recommended pressure 0.2bar
62(w) x 62(h) x 160(d)mm

TMS25 **£130.00**

Basin Taps without waste (pair)
Min recommended pressure 0.2bar
46(w) x 114(h) x 139(d)mm

TMS70 **£114.00**

Bath Filler
Min recommended pressure 0.1bar
232(w) x 167(h) x 145(d)mm

TMS32 **£179.00**

Bath Shower Mixer & Handset
Min recommended pressure 0.3bar
232(w) x 167(h) x 145(d)mm

TMS42 **£269.00**

Marston Taps (Pair)

OUR MIRRORS & CABINETS

Something for everyone...

The Mirror & Cabinet Collection

Complete your fitted furniture bathroom with a stylish mirror or cabinet from our design-led collection. Choosing an illuminated mirror will help enlarge even the smallest of spaces, reflecting light and brightening your day. Using a cabinet can help create a calm, clutter-free space. A variety of useful supporting features such as heated demister pads and integrated recharging sockets will make you wonder how you ever managed without them. And with light temperature changing technology you can create the perfect bathroom environment.

MIRROR & CABINET FEATURES

Discover our collection of mirrors & cabinets encompassing a wealth of design features to brighten up your bathroom.

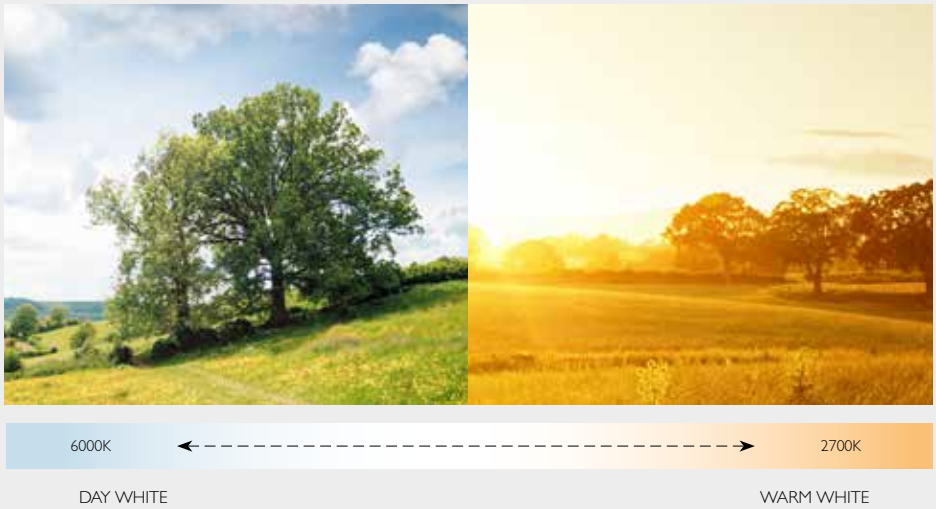

LIGHT TEMPERATURE CHANGING TECHNOLOGY

This lets you create the perfect bathroom environment by enabling you to adjust the warmth of your mirror illumination to suit both the task in hand and time of day. Kick-start your day with bright, invigorating daylight. Then choose a natural light to apply make-up and a warm light for sleepy late evening tasks.

Light temperature ranges from 2700K (Warm White) to 6000K (Daylight White). You can also adjust the intensity of the light to be as bright or as dim as you wish.

STEAM FREE

Many of our mirrors & cabinets feature a heated demister pad to keep your mirror steam-free. You'll really appreciate never having to wipe it down again!

The heated demister pad heats the mirror to a few degrees above room temperature within 2-3 minutes, preventing the mirror from misting in even the steamiest of bathrooms.

INFRARED SWITCH

Easy to use, an infrared switch allows you to control the mirror or cabinet with just the wave of your hand, without touching it.

Important: When mounting products with infrared switches, the sensor must be at least 150mm from an adjacent wall or obstruction to ensure the switch can function properly.

See individual details on each mirror or cabinet for applicable features.

BRING MUSIC TO YOUR BATHROOM

Catch up with the morning news during your shower or listen to your favourite play lists with **Bluetooth**® wireless technology. Easily pair your device to one of our innovative music mirrors featuring quality integrated speakers.

FOR YOUR CONVENIENCE

A convenient integrated recharging socket, suitable for electric shavers and toothbrushes is included with our Cadence mirror.

Aster Mirrors
Slim design, Energy efficient LED lighting, Light temperature changing technology, Heated demister pad, Infrared switch, IP44 rated
*Can be hung portrait or landscape

Aster 400mm Illuminated Mirror*
400(w) x 700(h) x 25(d)mm

AS40ALC	**£462.00**

Aster 490mm Illuminated Oval Mirror
490(w) x 650(h) x 25(d)mm

AS49ALE	**£424.00**

Aster 500mm Illuminated Mirror*
500(w) x 700(h) x 25(d)mm

AS70ALC	**£478.00**

Aster 600mm Illuminated Mirror*
600(w) x 800(h) x 25(d)mm

AS80ALC	**£515.00**

Aster Illuminated Pill Mirror
500(w) x 800(h) x 25(d)mm

AS50ALP	**£400.00**

Aster 1200mm Illuminated Mirror*
1200(w) x 500(h) x 25(d)mm

AS120ALC	**£665.00**

Aster 600mm Illuminated Circular Mirror
600(w) x 600(h) x 25(d)mm

AS60ALR	**£401.00**

Aster 800mm Illuminated Circular Mirror
800(w) x 800(h) x 25(d)mm

AS80ALR	**£450.00**

Beta Mirrors
Energy efficient LED lighting, Light temperature changing technology, Heated demister pad, Touch sensor control, IP44 rated.
*Can be hung portrait or landscape

Beta 450mm Illuminated Mirror*
450(w) x 600(h) x 22(d)mm

BTM045	**£292.00**

Beta 500mm Illuminated Mirror*
500(w) x 700(h) x 22(d)mm

BTM050	**£315.00**

Beta 600mm Illuminated Mirror*
600(w) x 800(h) x 22(d)mm

BTM060	**£341.00**

Beta 1200mm Illuminated Mirror
1200(w) x 600(h) x 22(d)mm

BTM120	**£462.00**

Beta 600mm Circular Illuminated Mirror
600(w) x 600(h) x 25(d)mm

BTM60C	**£299.00**

Beta 800mm Circular Illuminated Mirror
800(w) x 800(h) x 25(d)mm

BTM80C	**£375.00**

Aurora Mirrors
Floating design with super slim frame, Black powder coat finish, Energy efficient LED lighting, Light temperature changing technology, Heated demister pad, Infrared switch, IP44 rated

Aurora 600mm Illuminated Circular Mirror
600(w) x 600(h) x 33(d)mm

AUM60C	**£375.00**

Aurora 800mm Illuminated Circular Mirror
800(w) x 800(h) x 33(d)mm

AUM80C	**£475.00**

Cadence 500mm Mirror
500(w) x 700(h) x 56(d)mm

CDM050	**£375.00**

Cadence 600mm Mirror
600(w) x 800(h) x 56(d)mm

CDM060	**£449.00**

Cadence 1200mm Mirror
1200(w) x 600(h) x 56(d)mm

CDM120	**£529.00**

Cadence Mirrors
Energy efficient LED lighting, Two-pin charging socket for your shaver or toothbrush, Additional USB Charging Socket, Slim perimeter lighting, Heated demister pad, Touch sensor control, IP44 rated. Can be hung portrait or landscape.

Resonate Mirrors

Bluetooth® wireless technology allows you to pair your device to the mirror and control your music, ultra slim 25mm depth, heated demister pad, IP44 rated

Resonate 500mm Mirror
500(w) x 700(h) x 25(d)mm

RSM050	**£431.00**

Resonate 600mm Circular Mirror
600(w) x 600(h) x 25(d)mm

RSM600C	**£449.00**

Resonate 800mm Circular Mirror
800(w) x 800(h) x 25(d)mm

RSM800C	**£499.00**

Evade Mirrors
Energy efficient LED lighting, Infrared controls, Heated demister pad, IP44 rated.
* Can be hung portrait or landscape.

Evade 500mm Mirror*
500(w) x 700(h) x 26(d)mm

EVM050	**£231.00**

Evade 600mm Mirror*
600(w) x 800(h) x 26(d)mm

EVM060	**£274.00**

Evade 1000mm Mirror
1000(w) x 600(h) x 26(d)mm

EVM100	**£323.00**

Verge 450mm Mirror
450(w) x 700(h) x 38(d)mm

VRM045	**£149.00**

Verge 600mm Mirror
600(w) x 800(h) x 38(d)mm

VRM060	**£189.00**

Verge Oval Mirror
500(w) x 700(h) x 38(d)mm

VRM50V	**£189.00**

Verge Pill Mirror
500(w) x 800(h) x 38(d)mm

VRM50P	**£199.00**

Verge 600mm Circular Mirror
600(w) x 600(h) x 38(d)mm

VRM60C	**£139.00**

Verge 800mm Circular Mirror
800(w) x 800(h) x 38(d)mm

VRM80C	**£199.00**

Verge Mirrors
Framed with a high quality aluminium trim in matt black finish,
Rectangular versions can be mounted landscape & portrait

Verge Mirror

Lansdown \ Vitoria Illuminated Mirror
556(w) x 790(h) x 54(d)mm
Painted frame to coordinate with Legacy furniture,
Energy efficient LED lighting, Heated demister pad, Rocker switch, IP44 rated

Illuminated Mirror - ILL6MIR	**£254.00**
Mineral Blue Frame - LAN55MF.MB	**£150.00**
Matt Dark Grey Frame - LAN55MF.DGM	**£150.00**

Slide Cabinets
Intuitive slide controls, Energy efficient LED lighting, Light temperature changing technology, USB charging socket, Heated demister door, Recharging socket, Adjustable shelves, Soft close hinges, IP44 rated

Single Door
500(w) x 700(h) x 140(d)mm

SDC050U	**£630.00**

Double Door
650(w) x 700(h) x 140(d)mm

SDC065U	**£750.00**

Flex Cabinets
Energy efficient LED lighting, Light temperature changing technology, USB charging socket, Heated demister door, Recharging socket, Adjustable shelves, Soft close hinges, IP44 rated

Single Door 500(w) x 697(h) x 125(d)mm	FXC050U	**£665.00**
Double Door 650(w) x 697(h) x 125(d)mm	FXC065U	**£780.00**
Large Double Door 1000(w) x 697(h) x 125(d)mm	FXC100U	**£960.00**

Sleek Cabinets
Energy efficient LED lighting, Adjustable shelves, Soft close hinges, IP44 rated

Single Door with Charging Socket 490(w) x 650(h) x 136(d)mm	SL44AL	**£401.00**
Double Door with Charging Socket 650(w) x 650(h) x 136(d)mm	SL60AL	**£491.00**
Lge Double Door with Charging Socket 1048(w) x 658(h) x 129(d)	SL100AL	**£750.00**
Single Door 490(w) x 650(h) x 136(d)mm	STC044	**£347.00**
Double Door (w) x 650(h) x 136(d)mm	STC060	**£442.00**

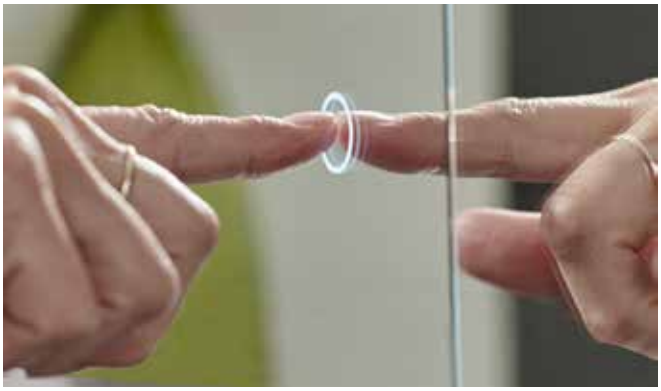

Façade Cabinets
Recessed cabinets, Energy efficient LED lighting, Heated demister door, Recharging socket, Soft close hinges, Left or right hinged, IP44 rated, For recessed installations only.

Single Door 479(w) x 664(h) x 148(d)mm	FCC050	**£419.00**
Double Door 639(w) x 664(h) x 148(d)mm	FCC060	**£545.00**
Large Double Door 1039(w) x 664(h) x 148(d)mm	FCC100	**£780.00**

Compact 1000mm fitted furniture basin & WC run. Perfect for small spaces

PRODUCT GUIDE

Technical Information

Product Guide

Further product detail and technical specifications are covered in the following section of our product guide.

74 Standard & Slim Depth Furniture
78 Handles
79 Integrated Basins & Worktops
80 Solid Surface Worktops
81 Laminate Worktops
81 Plinths
82 Clad-On Panels & Bath Panels
83 Semi-Countertop Basins
86 Back To Wall WCs
88 Comfort Height WCs
89 Wall Hung WCs
90 Wall Hung WC Frames
91 Cisterns
92 Flushing Options

For more information please visit our website.

tavistock-bathrooms.co.uk/fitted-furniture

BASIN UNITS

PRODUCT	FEATURES	FINISH	CARCASS	STD DEPTH CODE	SLIM DEPTH CODE
500 Basin Unit With Fascia/Door Pack & Carcass					
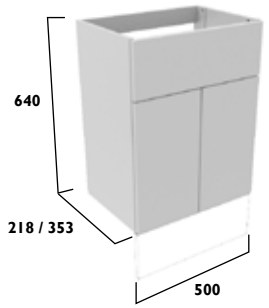	• Fascia to be cut on site to suit sanitaryware • One adjustable shelf • Soft close hinges • Removable back panel • For compatible basins see page 45 • A plinth is required for this unit, see page 81	**Calm**			
		Mineral Blue	Graphite	T3SC5C.MB	T2SC5C.MB
		Matt Dark Grey	Graphite	T3SC5C.MDG	T2SC5C.MDG
		Gloss White	White	T3SC5C.GW	T2SC5C.GW
		Gloss Light Grey	Graphite	T3SC5C.GLG	T2SC5C.GLG
		Kona	Graphite	T3SC5C.KN	T2SC5C.KN
		Legacy			
		Mineral Blue	Oak	T3SC5L.MB	T2SC5L.MB
		Flax	Oak	T3SC5L.FX	T2SC5L.FX
		Metro Grey	Oak	T3SC5L.MG	T2SC5L.MG
		Matt Dark Grey	Oak	T3SC5L.MDG	T2SC5L.MDG
				£385.10	£385.10
600 Basin Unit With Fascia/Door Pack & Carcass					
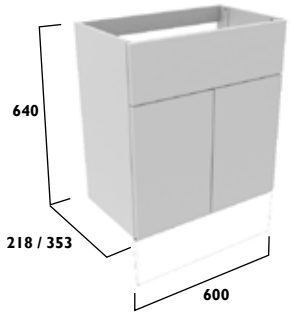	• Fascia to be cut on site to suit sanitaryware • One adjustable shelf • Soft close hinges • Removable back panel • For compatible basins see page 45 • A plinth is required for this unit, see page 81	**Calm**			
		Mineral Blue	Graphite	T3SC6C.MB	T2SC6C.MB
		Matt Dark Grey	Graphite	T3SC6C.MDG	T2SC6C.MDG
		Gloss White	White	T3SC6C.GW	T2SC6C.GW
		Gloss Light Grey	Graphite	T3SC6C.GLG	T2SC6C.GLG
		Kona	Graphite	T3SC6C.KN	T2SC6C.KN
		Legacy			
		Mineral Blue	Oak	T3SC6L.MB	T2SC6L.MB
		Flax	Oak	T3SC6L.FX	T2SC6L.FX
		Metro Grey	Oak	T3SC6L.MG	T2SC6L.MG
		Matt Dark Grey	Oak	T3SC6L.MDG	T2SC6L.MDG
				£412.30	£412.30

BACK TO WALL WC UNITS

PRODUCT	FEATURES	FINISH	CARCASS	STD DEPTH CODE	SLIM DEPTH CODE
500 Back To Wall WC With Fascia Pack & Carcass					
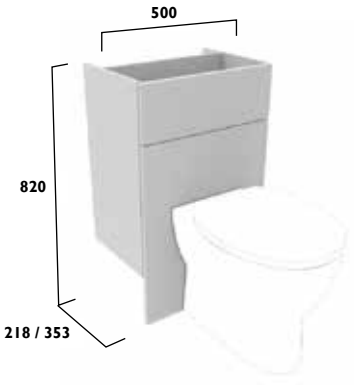	• Fascia to be cut on site to suit WC • Main panel goes to floor • Front access top fascia • Can also be used with wall hung WCs when paired with a specifically designed wall hung frame, see page 49 for options • For compatible back to wall WCs see page 47	**Calm**			
		Mineral Blue	Graphite	T3BW5C.MB	T2BW5C.MB
		Matt Dark Grey	Graphite	T3BW5C.MDG	T2BW5C.MDG
		Gloss White	White	T3BW5C.GW	T2BW5C.GW
		Gloss Light Grey	Graphite	T3BW5C.GLG	T2BW5C.GLG
		Kona	Graphite	T3BW5C.KN	T2BW5C.KN
		Legacy			
		Mineral Blue	Oak	T3BW5L.MB	T2BW5L.MB
		Flax	Oak	T3BW5L.FX	T2BW5L.FX
		Metro Grey	Oak	T3BW5L.MG	T2BW5L.MG
		Matt Dark Grey	Oak	T3BW5L.MDG	T2BW5L.MDG
				£385.10	£385.10
600 Back To Wall WC With Fascia Pack & Carcass					
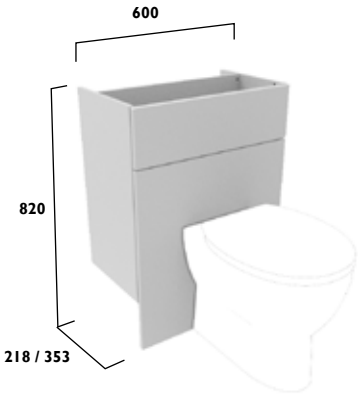	• Fascia to be cut on site to suit WC • Main panel goes to floor • Front access top fascia • Can also be used with wall hung WCs when paired with a specifically designed wall hung frame, see page 49 for options • For compatible back to wall WCs see page 47	**Calm**			
		Mineral Blue	Graphite	T3BW6C.MB	T2BW6C.MB
		Matt Dark Grey	Graphite	T3BW6C.MDG	T2BW6C.MDG
		Gloss White	White	T3BW6C.GW	T2BW6C.GW
		Gloss Light Grey	Graphite	T3BW6C.GLG	T2BW6C.GLG
		Kona	Graphite	T3BW6C.KN	T2BW6C.KN
		Legacy			
		Mineral Blue	Oak	T3BW6L.MB	T2BW6L.MB
		Flax	Oak	T3BW6L.FX	T2BW6L.FX
		Metro Grey	Oak	T3BW6L.MG	T2BW6L.MG
		Matt Dark Grey	Oak	T3BW6L.MDG	T2BW6L.MDG
				£412.30	£412.30

STORAGE CUPBOARDS

PRODUCT	FEATURES	FINISH	CARCASS	STD DEPTH CODE	SLIM DEPTH CODE
200 Floor Cupboard With Door Pack & Carcass					
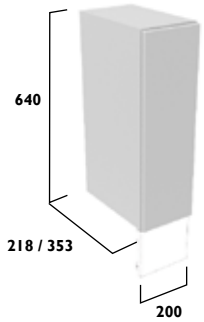	• Soft close hinges • One adjustable shelf • Reversible door • A plinth is required for this unit, see page 81 *These products have plain fronted door packs	**Calm**			
		Mineral Blue	Graphite	T3FC2C.MB	T2FC2C.MB
		Matt Dark Grey	Graphite	T3FC2C.FX	T2FC2C.FX
		Gloss White	White	T3FC2C.GW	T2FC2C.GW
		Gloss Light Grey	Graphite	T3FC2C.GLG	T2FC2C.GLG
		Kona	Graphite	T3FC2C.KN	T2FC2C.KN
		Legacy			
		Mineral Blue	Oak	T3FC2L.MB*	T2FC2L.MB*
		Flax	Oak	T3FC2L.FX*	T2FC2L.FX*
		Metro Grey	Oak	T3FC2L.MG*	T2FC2L.MG*
		Matt Dark Grey	Oak	T3FC2L.MDG*	T2FC2L.MDG*
				£280.40	£280.40
300 Floor Cupboard With Door Pack & Carcass					
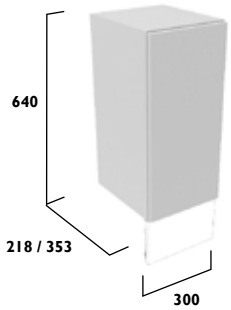	• Soft close hinges • One adjustable shelf • Reversible door • A plinth is required for this unit, see page 81	**Calm**			
		Mineral Blue	Graphite	T3FC3C.MB	T2FC3C.MB
		Matt Dark Grey	Graphite	T3FC3C.MDG	T2FC3C.MDG
		Gloss White	White	T3FC3C.GW	T2FC3C.GW
		Gloss Light Grey	Graphite	T3FC3C.GLG	T2FC3C.GLG
		Kona	Graphite	T3FC3C.KN	T2FC3C.KN
		Legacy			
		Mineral Blue	Oak	T3FC3L.MB	T2FC3L.MB
		Flax	Oak	T3FC3L.FX	T2FC3L.FX
		Metro Grey	Oak	T3FC3L.MG	T2FC3L.MG
		Matt Dark Grey	Oak	T3FC3L.MDG	T2FC3L.MDG
				£296.10	£296.10
300 Floor Cupboard With Door Pack & Carcass					
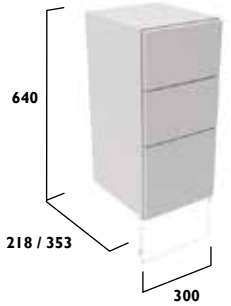	• Soft close runners • A plinth is required for this unit, see page 81	**Calm**			
		Mineral Blue	Graphite	T33D3C.MB	
		Matt Dark Grey	Graphite	T33D3C.MDG	
		Gloss White	White	T33D3C.GW	
		Gloss Light Grey	Graphite	T33D3C.GLG	
		Kona	Graphite	T33D3C.KN	
		Legacy			
		Mineral Blue	Oak	T33D3L.MB	
		Flax	Oak	T33D3L.FX	
		Metro Grey	Oak	T33D3L.MG	
		Matt Dark Grey	Oak	T33D3L.MDG	
				£688.50	
300 Full Height Cupboard With Door Pack & Carcass					
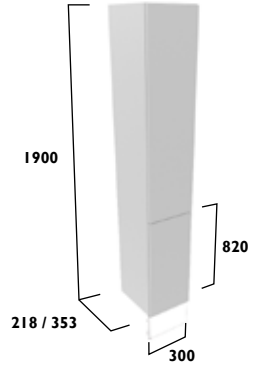	• Soft close hinges • Reversible doors • Two adjustable glass shelves in top section • One wooden adjustable shelf in base • A plinth is required for this unit, see page 81	**Calm**			
		Mineral Blue	Graphite	T3FH3C.MB	T2FH3C.MB
		Matt Dark Grey	Graphite	T3FH3C.MDG	T2FH3C.MDG
		Gloss White	White	T3FH3C.GW	T2FH3C.GW
		Gloss Light Grey	Graphite	T3FH3C.GLG	T2FH3C.GLG
		Kona	Graphite	T3FH3C.KN	T2FH3C.KN
		Legacy			
		Mineral Blue	Oak	T3FH3L.MB	T2FH3L.MB
		Flax	Oak	T3FH3L.FX	T2FH3L.FX
		Metro Grey	Oak	T3FH3L.MG	T2FH3L.MG
		Matt Dark Grey	Oak	T3FH3L.MDG	T2FH3L.MDG
				£610.50	£610.50

WALL CUPBOARDS

SUITABLE FOR USE WITH STANDARD & SLIM DEPTH UNITS

PRODUCT	FEATURES	FINISH	CARCASS	CODE
300 Wall Cupboard With Door Pack & Carcass				
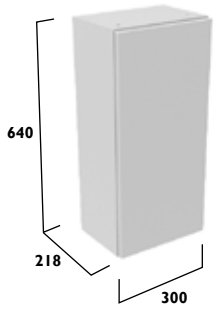	• Soft close hinges • Reversible door • Two glass shelves • Concealed hangers • Suitable for standard & slim depth units	**Calm**		
		Mineral Blue	Graphite	TWC3C.MB
		Matt Dark Grey	Graphite	TWC3C.MDG
		Gloss White	White	TWC3C.GW
		Gloss Light Grey	Graphite	TWC3C.GLG
		Kona	Graphite	TWC3C.KN
		Legacy		
		Mineral Blue	Oak	TWC3L.MB
		Flax	Oak	TWC3L.FX
		Metro Grey	Oak	TWC3L.MG
		Matt Dark Grey	Oak	TWC3L.MDG
				£296.10
600 Wall Cupboard With Door Pack & Carcass				
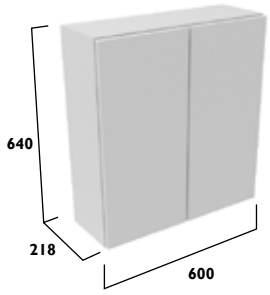	• Soft close hinges • Two glass shelves • Concealed hangers • Suitable for standard & slim depth units	**Calm**		
		Mineral Blue	Graphite	TWC6C.MB
		Matt Dark Grey	Graphite	TWC6C.MDG
		Gloss White	White	TWC6C.GW
		Gloss Light Grey	Graphite	TWC6C.GLG
		Kona	Graphite	TWC6C.KN
		Legacy		
		Mineral Blue	Oak	TWC6L.MB
		Flax	Oak	TWC6L.FX
		Metro Grey	Oak	TWC6L.MG
		Matt Dark Grey	Oak	TWC6L.MDG
				£435.20

CHARGING STATION

Add further functionality to your new Tavistock fitted furniture by adding our charging station. The subtle little unit can be installed into our floor cupboards or wall cabinets and includes both a two-pin charging socket and a USB port to keep all your electricals fully charged.

- For use within fitted furniture cupboards and wall cabinets
- Two-pin charging point with rocker switch
- USB charging socket
- Matt black finish
- Cover to hide sockets when not in use
- Screwless mounting
- Requires a mains connection (supplied with one metre flying lead)
- Not recommended for installations in semi-countertop units or drawers
- IP44

Charging Station	
DC6001	£153.00

HANDLES

PRODUCT		SIZE	FINISH	CODE	PRICE
Adela Handle		168mm (l)	Chrome	TFHADE.C	£6.50
Lucia Handle		135mm (l)	Chrome Black	TFHLUC.128.C TFHLUC.128.B	£15.20
Cecily Handle		170mm (l)	Chrome Burnished Copper	TFHCEC.C TFHCEC.BC	£19.00
Odelia Handle		197mm (l) 247mm (l) 297mm (l) 397mm (l)	Chrome	TFHODE.20.C TFHODE.25.C TFHODE.30.C TFHODE.40.C	£16.60 £19.00 £21.60 £27.80
Malin Knob		30mm(w)	Chrome	TFHMAL.C	£7.80
Hana Knobs		32mm (dia)	Chrome Brushed Brass Black	TFHHAN.C TFHHAN.A TFHHAN.B	£9.10
Florence Knob		31mm (dia)	Chrome Burnished Copper	TFHFLO.C TFHFLO.BC	£10.30
Tula Handle		55mm(w)	Chrome	TFHTUL.C	£12.80
Clara Knob		26mm (dia)	Chrome	TFHCLA.G	£25.40
Maya Knobs		29mm (dia)	Chrome	TFHMAY.C TFHMAY.A	£23.60
Sofia Knob		30mm (dia)	Bronze	TFHSOF.BR	£17.70

All Integrated basins & worktops have a +/- 3mm tolerance

INTEGRATED BASINS & WORKTOPS

PRODUCT	FEATURES	CODE	PRICE
1240mm Standard Depth Integrated Basin & Worktop - Left Hand 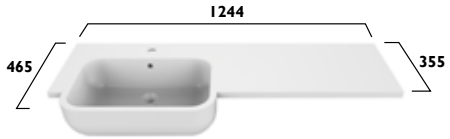	• To be used with standard depth 600mm semi-countertop units only • Integral overflow	TIS1240S.L	£385.00
1240mm Standard Depth Integrated Basin & Worktop - Right Hand 	• To be used with standard depth 600mm semi-countertop units only • Integral overflow	TIS1240S.R	£385.00
1240mm Slim Depth Integrated Basin & Worktop - Left Hand 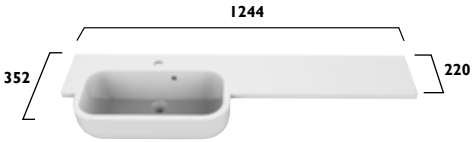	• To be used with slim depth 600mm semi-countertop units only • Integral overflow	TIS1240SM.L	£385.00
1240mm Slim Depth Integrated Basin & Worktop - Right Hand 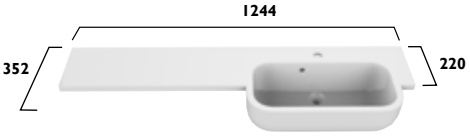	• To be used with slim depth 600mm semi-countertop units only • Integral overflow	TIS1240SM.R	£385.00
1540mm Standard Depth Integrated Basin & Worktop - Left Hand 	• To be used with standard depth 600mm semi-countertop units only • Integral overflow	TIS1540S.L	£471.00
1540mm Standard Depth Integrated Basin & Worktop - Right Hand 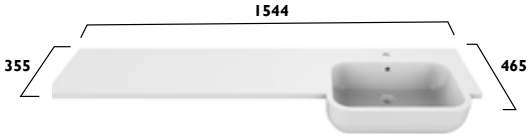	• To be used with standard depth 600mm semi-countertop units only • Integral overflow	TIS1540S.R	£471.00
1540mm Slim Depth Integrated Basin & Worktop - Left Hand 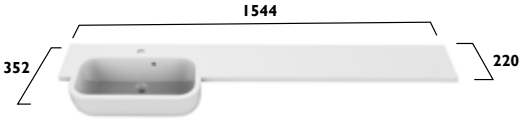	• To be used with slim depth 600mm semi-countertop units only • Integral overflow	TIS1540SM.L	£471.00
1540mm Slim Depth Integrated Basin & Worktop - Right Hand 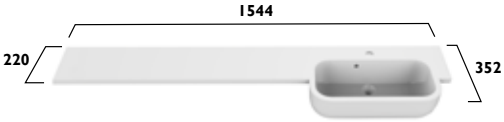	• To be used with slim depth 600mm semi-countertop units only • Integral overflow	TIS1540SM.R	£471.00

SOLID SURFACE WORKTOPS

PRODUCT	FEATURES	FINISH	CODE	PRICE
Standard Depth 680mm Solid Surface Worktop 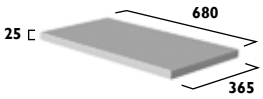	• 680mm solid surface worktop • For use with standard depth furniture • Can be cut to any size/shape • Supplied with factory finished front & ends • 3mm edge profile	Arctic White Starlight Stone Grey Grey Quartz Carrara	TF3W6A.AR TF3W6A.SL TF3W6A.SG TF3W6A.GQ TF3W6A.CA	£214.00
Standard Depth 1280mm Solid Surface Worktop 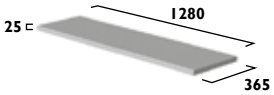	• 1280mm solid surface worktop • For use with standard depth furniture • Can be cut to any size/shape • Supplied with factory finished front & ends • 3mm edge profile	Arctic White Starlight Stone Grey Grey Quartz Carrara	TF3W12A.AR TF3W12A.SL TF3W12A.SG TF3W12A.GQ TF3W12A.CA	£389.00
Standard Depth 1880mm Solid Surface Worktop 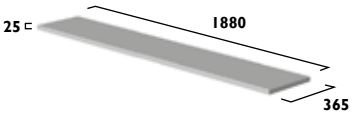	• 1880mm solid surface worktop • For use with standard depth furniture • Can be cut to any size/shape • Supplied with factory finished front & ends • 3mm edge profile	Arctic White Starlight Stone Grey Grey Quartz Carrara	TF3W18A.AR TF3W18A.SL TF3W18A.SG TF3W18A.GQ TF3W18A.CA	£494.00
Slim Depth 680mm Solid Surface Worktop 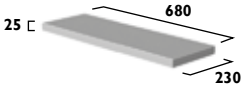	• 680mm solid surface worktop • For use with slim depth furniture • Can be cut to any size/shape • Supplied with factory finished front & ends • 3mm edge profile	Arctic White Starlight Stone Grey Grey Quartz Carrara	TF2W6A.AR TF2W6A.SL TF2W6A.SG TF2W6A.GQ TF2W6A.CA	£163.00
Slim Depth 1280mm Solid Surface Worktop 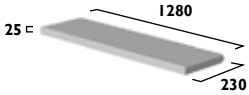	• 1280mm solid surface worktop • For use with slim depth furniture • Can be cut to any size/shape • Supplied with factory finished front & ends • 3mm edge profile	Arctic White Starlight Stone Grey Grey Quartz Carrara	TF2W12A.AR TF2W12A.SL TF2W12A.SG TF2W12A.GQ TF2W12A.CA	£273.00
Slim Depth 1880mm Solid Surface Worktop 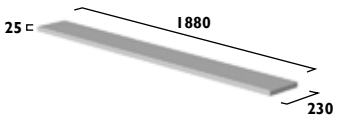	• 1880mm solid surface worktop • For use with slim depth furniture • Can be cut to any size/shape • Supplied with factory finished front & ends • 3mm edge profile	Arctic White Starlight Stone Grey Grey Quartz Carrara	TF2W18A.AR TF2W18A.SL TF2W18A.SG TF2W18A.GQ TF2W18A.CA	£389.00
Solid Surface Worktop Adhesive 	• 2 part glue cartridge and nozzle • 2 part adhesive for solid surface worktops • Supplied with applicator - no need for specialist adhesive gun	Clear	FSG.CL	£46.20

LAMINATE WORKTOPS & PLINTHS

PRODUCT	FEATURES	FINISH	CODE	PRICE
Standard Depth 1500mm Laminate Worktop 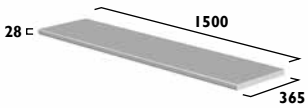	• 28mm thickness with a 6mm edge radius • Edge banded both ends & supplied with extra edge banding to use when cut down • Sealed under front profile to prevent water ingress	White Black Granite Riven Slate Isadora Stone	TF3W15.W TF3W15.BG TF3W15.SL TF3W15.IS	£124.50
Standard Depth 2000mm Laminate Worktop 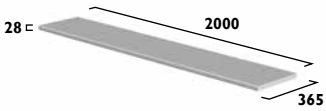	• 28mm thickness with a 6mm edge radius • Edge banded both ends & supplied with extra edge banding to use when cut down • Sealed under front profile to prevent water ingress	White Black Granite Riven Slate Isadora Stone	TF3W20.W TF3W20.BG TF3W20.SL TF3W20.IS	£152.50
Standard Depth 3000mm Laminate Worktop 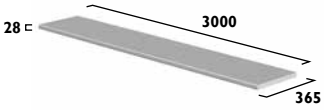	• 28mm thickness with a 6mm edge radius • Edge banded both ends & supplied with extra edge banding to use when cut down • Sealed under front profile to prevent water ingress	White Black Granite Riven Slate Isadora Stone	TF3W30.W TF3W30.BG TF3W30.SL TF3W30.IS	£305.00
Slim Depth 1500mm Laminate Worktop 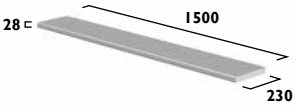	• 28mm thickness with a 6mm edge radius • Edge banded both ends & supplied with extra edge banding to use when cut down • Sealed under front profile to prevent water ingress	White Black Granite Riven Slate Isadora Stone	TF2W15.W TF2W15.BG TF2W15.SL TF2W15.IS	£103.50
Slim Depth 2000mm Laminate Worktop 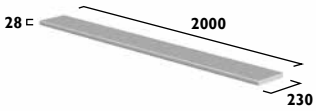	• 28mm thickness with a 6mm edge radius • Edge banded both ends & supplied with extra edge banding to use when cut down • Sealed under front profile to prevent water ingress	White Black Granite Riven Slate Isadora Stone	TF2W20.W TF2W20.BG TF2W20.SL TF2W20.IS	£132.00
1500 Plinths 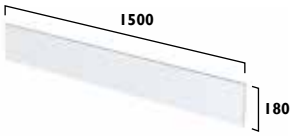	• 1500mm length - cut to size • Finished on all edges	Mineral Blue Gloss White Gloss Light Grey Kona Flax Metro Grey Matt Dark Grey	TPL15S.MB TPL15S.W TPL15S.GLG TPL15S.KN TPL15T.FX TPL15T.MG TPL15T.MDG	£76.40
2000 Plinths 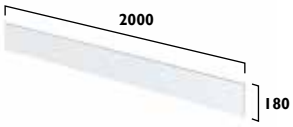	• 1500mm length - cut to size • Finished on all edges	Mineral Blue Gloss White Gloss Light Grey Kona Flax Metro Grey Matt Dark Grey	TPL20S.MB TPL20S.W TPL20S.GLG TPL20S.KN TPL20T.FX TPL20T.MG TPL20T.MDG	£95.50

CLAD-ON PANELS & BATH PANELS

Clad-on end panels can be cut to size and used as a filler panel for awkward spaces.
Panels can also be cut in half and used between adjoining units for a framed look, particularly effective when used with Legacy furniture.

PRODUCT	FEATURES	FINISH	CODE	PRICE
Standard Depth Clad-On End Panels	• Finished on all edges • Can be cut to suit different installations • Use for colour matched end panels	Mineral Blue Gloss White Gloss Light Grey Kona Flax Metro Grey Matt Dark Grey	T3EP8S.MB T3EP8S.W T3EP8S.GLG T3EP8S.KN T3EP8S.FX T3EP8T.MG T3EP8T.MDG	£76.40
Tall Standard Depth Clad-On End Panels 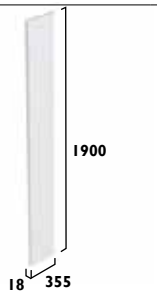	• Finished on all edges • Can be cut to suit different installations • Use for colour matched end panels	Mineral Blue Gloss White Gloss Light Grey Kona Flax Metro Grey Matt Dark Grey	T3EP19S.MB T3EP19S.W T3EP19S.GLG T3EP19S.KN T3EP19S.MG T3EP19T.MG T3EP19T.MDG	£166.50
Slim Depth Clad-On End Panels 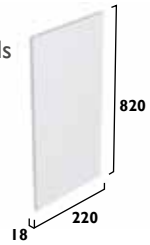	• Finished on all edges • Can be cut to suit different installations • Use for colour matched end panels	Mineral Blue Gloss White Gloss Light Grey Kona Flax Metro Grey Matt Dark Grey	T2EP8S.MB T2EP8S.W T2EP8S.GLG T2EP8S.KN T2EP8S.FX T2EP8T.MG T2EP8T.MDG	£70.20
Tall Slim Depth Clad-On End Panels 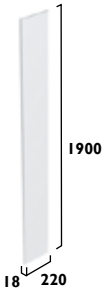	• Finished on all edges • Can be cut to suit different installations • Use for colour matched end panels	Mineral Blue Gloss White Gloss Light Grey Kona Flax Metro Grey Matt Dark Grey	T2EP19S.MB T2EP19S.W T2EP19S.GLG T2EP19S.KN T2EP19S.FX T2EP19T.MG T2EP19T.MDG	£141.00
1700 Bath Panel 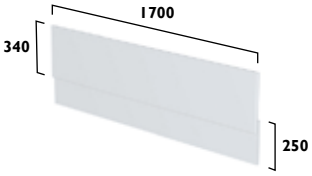	• Plinth included • Nominal height from underside of bath to floor 520mm, this gives plinth height of 180mm to match furniture • Plinth can be screwed to panel from rear • Maximum height 570mm	Mineral Blue Gloss White Gloss Light Grey Kona Flax Metro Grey Matt Dark Grey	TBP17S.MB TBP17S.W TBP17S.GLG TBP17S.KN TBP17S.FX TBP17T.MG TBP17T.MDG	£192.50
700 End Bath Panel 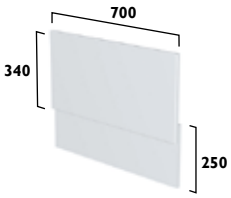	• Plinth included • Nominal height from underside of bath to floor 520mm, this gives plinth height of 180mm to match furniture • Plinth can be screwed to panel from rear • Maximum height 570mm	Mineral Blue Gloss White Gloss Light Grey Kona Flax Metro Grey Matt Dark Grey	TBP07S.MB TBP07S.W TBP07S.GLG TBP07S.KN TBP07S.FX TBP07T.MG TBP07T.MDG	£115.50

SEMI-COUNTERTOP BASINS STANDARD DEPTH

VITORIA - STANDARD DEPTH

1 Tap Hole Semi-Countertop Basin

- Suitable for use with standard depth furniture
- Supplied with cutting template for worktop and fascia
- Monobloc tap hole & overflow
- Minimum furniture depth 275mm

SCSB850S £232.00

VITORIA - STANDARD DEPTH

2 Tap Holes Semi-Countertop Basin

- Suitable for use with standard depth furniture
- Supplied with cutting template for worktop and fascia
- 2 tap holes & overflow
- Minimum furniture depth 275mm

SCDB850S £232.00

LANSDOWN - STANDARD DEPTH

1 Tap Hole Semi-Countertop Basin

- Suitable for use with standard depth furniture
- Supplied with cutting template for worktop and fascia
- Monobloc tap hole & overflow
- Minimum furniture depth 275mm

DC14047 £239.50

LANSDOWN - STANDARD DEPTH

2 Tap Hole Semi-Countertop Basin

- Suitable for use with standard depth furniture
- Supplied with cutting template for worktop and fascia
- Monobloc tap hole & overflow
- Minimum furniture depth 275mm

DC14048 £239.50

AERIAL - STANDARD DEPTH

1 Tap Hole Semi-Countertop Basin

- Suitable for use with standard depth furniture
- Supplied with cutting template for worktop and fascia
- Monobloc tap hole & overflow
- Minimum furniture depth 290mm

DC14002 £211.00

STRUCTURE - STANDARD DEPTH

1 Tap Hole Semi-Countertop Basin

- Suitable for use with standard depth furniture
- Supplied with cutting template for worktop and fascia
- Monobloc tap hole & overflow
- Minimum furniture depth 320mm

SCSB453S £235.00

ORBIT - STANDARD DEPTH

1 Tap Hole Semi-Countertop Basin

- Suitable for use with standard depth furniture
- Supplied with cutting template for worktop and fascia
- Monobloc tap hole & overflow
- Minimum furniture depth 250mm

DC14004 £205.00

Q60 - STANDARD DEPTH

1 Tap Hole 515mm Semi-Countertop Basin

- Suitable for use with standard depth furniture
- Supplied with cutting template for worktop and fascia
- Monobloc tap hole & overflow
- Minimum furniture depth 320mm

G3SCBAS £235.00

SEMI-COUNTERTOP BASINS STANDARD DEPTH

Q60 - STANDARD DEPTH

1 Tap Hole 500mm Semi-Countertop Basin

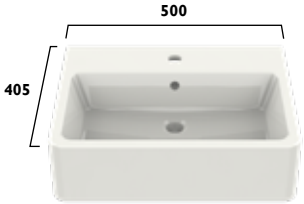

- Suitable for use with 500mm width basin units
- Suitable for use with standard depth furniture
- Supplied with cutting template for worktop and fascia
- Monobloc tap hole & overflow
- Minimum furniture depth 255mm

G3SCBAS50	£220.00

VIBE - STANDARD DEPTH

1 Tap Hole Semi-Countertop Basin

- Suitable for use with standard depth furniture
- Supplied with cutting template for worktop and fascia
- Monobloc tap hole & overflow
- Minimum furniture depth 270mm

SCSB700S	£212.50

LOFT/MICRA EVO - STANDARD DEPTH

1 Tap Hole Semi-Countertop Basin

- Suitable for use with 500mm width basin units
- Supplied with cutting template for worktop and fascia
- Monobloc tap hole & overflow
- Minimum furniture depth 275mm

DC14029	£195.00

SEMI-COUNTERTOP BASINS SLIM DEPTH

LANSDOWN - SLIM DEPTH

1 Tap Hole Semi-Countertop Basin

- Suitable for use with 500mm width basin units
- Supplied with cutting template for worktop and fascia
- Monobloc tap hole & overflow
- Minimum furniture depth 218mm

DC14045 £215.50

LANSDOWN - SLIM DEPTH

2 Tap Hole Semi-Countertop Basin

- Suitable for use with 500mm width basin units
- Supplied with cutting template for worktop and fascia
- Monobloc tap hole & overflow
- Minimum furniture depth 218mm

DC14046 £215.50

AERIAL - SLIM DEPTH

1 Tap Hole Semi-Countertop Basin

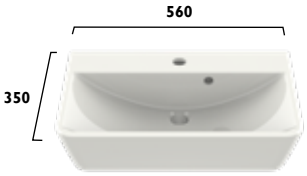

- Suitable for use with slim depth furniture
- Supplied with cutting template for worktop and fascia
- Monobloc tap hole & overflow
- Minimum furniture depth 218mm

DC14003 £192.50

STRUCTURE - SLIM DEPTH

1 Tap Hole Semi-Countertop Basin

- Suitable for use with slim depth furniture
- Supplied with cutting template for worktop and fascia
- Monobloc tap hole & overflow
- Minimum furniture depth 218mm

SCSB452S £223.50

ORBIT - SLIM DEPTH

1 Tap Hole Semi-Countertop Basin

- Suitable for use with slim depth furniture
- Supplied with cutting template for worktop and fascia
- Monobloc tap hole & overflow
- Minimum furniture depth 215mm

DC14005 £186.00

Q60 - SLIM DEPTH

1 Tap Hole Semi-Countertop Basin

- Suitable for use with slim depth furniture
- Supplied with cutting template for worktop and fascia
- Monobloc tap hole & overflow
- Minimum furniture depth 218mm

G2SCBAS £220.50

LOFT/MICRA EVO - SLIM DEPTH

1 Tap Hole Semi-Countertop Basin

- Suitable for use with 500mm width basin units
- Supplied with cutting template for worktop and fascia
- Monobloc tap hole & overflow
- Minimum furniture depth 218mm

DC14028 £167.50

BACK TO WALL WCs & SEATS

VITORIA - BACK TO WALL WC

- 520mm projection
- Horizontal outlet
- Use with the Vitoria seat (opposite)
- Concealed fixings for anchoring to floor

BTW850S	£293.00

VITORIA - SOFT CLOSE TOILET SEAT

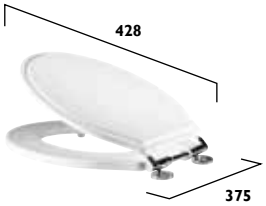

- Suitable for use with Vitoria back to wall WC
- Top fix or under fix
- Painted wooden seat
- Chrome soft close bar hinge

TS850WSC	Gloss White	£142.00
DC4003	Linen White	£142.00
DC4004	Matt Dark Grey	£142.00

LANSDOWN - BACK TO WALL WC

- 490mm projection
- Easi-Clean rimless design
- Horizontal outlet
- Concealed fixings for anchoring to floor

DC14044	£328.00

LANSDOWN - SOFT CLOSE TOILET SEAT

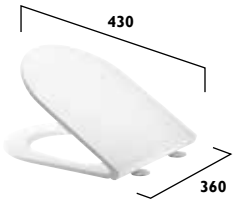

- Suitable for use with Lansdown back to wall WC
- Top fix design
- Thermoset seat
- Chrome soft close hinges
- Single button quick release

DC14037	£85.30

STRUCTURE - 515 BACK TO WALL WC

- 515mm projection
- Horizontal outlet
- Concealed fixings for anchoring to floor
- Can be used with either Structure seat (TS450S & TS451S)

BTW450S	£290.00

STRUCTURE - SOFT CLOSE TOILET SEAT

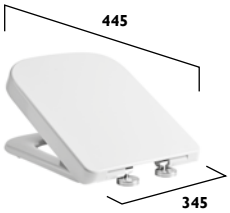

- Suitable for use with Structure back to wall, comfort height & wall hung WCs
- Top fix design
- Thermoset seat
- Chrome soft close hinges
- Lift off quick release

TS450S	£85.30

STRUCTURE - 475 BACK TO WALL WC

- 475mm short projection
- Easi-clean rimless design
- Horizontal outlet
- Concealed fixings for anchoring to floor
- Can be used with either Structure seat (TS450S & TS451S)

BTW475S	£238.00

STRUCTURE - SLIM SOFT CLOSE TOILET SEAT

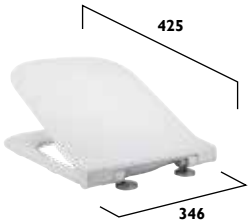

- Suitable for use with Structure back to wall, comfort height & wall hung WCs
- Top fix design
- Thermoset seat
- Slim design
- Chrome soft close hinges
- Lift off quick release

TS451S	£85.30

ORBIT - BACK TO WALL WC

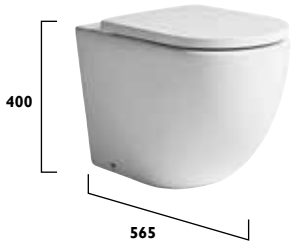

- 565mm projection
- Easi-Clean rimless design
- Horizontal outlet
- Concealed fixings for anchoring to floor

BTW250S **£332.00**

ORBIT - SOFT CLOSE TOILET SEAT

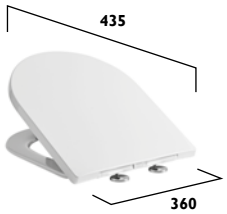

- Suitable for use with Orbit back to wall & wall hung WCs
- Top fix design
- Thermoset seat
- Wrap over style
- Chrome soft close hinges
- Single button quick release

TS250S-SF **£93.10**

VIBE - BACK TO WALL WC

- 540mm projection
- Horizontal outlet
- Concealed fixings for anchoring to floor

BTW700XS **£317.00**

VIBE - SOFT CLOSE TOILET SEAT

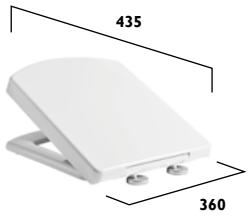

- Suitable for use with Vibe back to wall & wall hung WCs
- Top fix design
- Thermoset seat
- Chrome soft close hinges
- Single button quick release

TS700S **£85.90**

LOFT - BACK TO WALL WC

- 490mm projection
- Easi-clean rimless design
- Horizontal outlet
- Concealed fixings for anchoring to floor
- Can be used with either DC14030 or O803SC-SF seat

DC14026 **£238.00**

LOFT - WRAP OVER TOILET SEAT

- Suitable for use with Loft back to wall WC
- Top fix design
- Thermoset seat
- Chrome soft close hinges
- Lift off quick release

DC14030 **£120.50**

MICRA EVO - BACK TO WALL WC

- 490mm projection
- Easi-clean rimless design
- Horizontal outlet
- Concealed fixings for anchoring to floor

BTW950S **£213.70**

MICRA EVO - TOILET SEAT

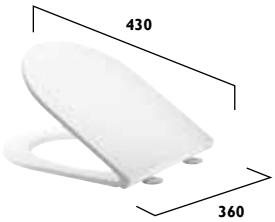

- Suitable for use with Micra-Evo
- Top fix design
- Thermoset seat
- Chrome soft close hinges
- Single button quick release

DC14037 **£85.30**

COMFORT HEIGHT BACK TO WALL WCs

AERIAL - COMFORT HEIGHT

Comfort Height Back To Wall WC

- 505mm projection
- Easi-clean rimless design
- Horizontal outlet
- Use with Aerial toilet seat TS650S
- Use with TR9008 comfort height cistern

BTWC650S	£319.00

STRUCTURE - COMFORT HEIGHT

Comfort Height Back To Wall WC

- 515mm projection
- Horizontal outlet
- Use with Structure toilet seats TS450S or TS45IS, see page 78
- Use with TR9008 comfort height cistern

BTWC450S	£318.00

LOFT - COMFORT HEIGHT

Comfort Height Back To Wall WC

- 490mm projection
- Easi-clean rimless design
- Horizontal outlet
- Use with Loft toilet seats O803SC-SF or DC14030, see page 80
- Use with TR9008 comfort height cistern

DC14027	£296.00

ALPINE- SECURE FIX TOILET SEAT

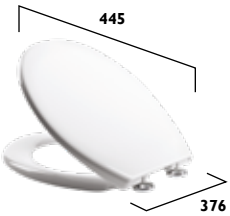

See how to install a Secure-Fix QR seat

- Suitable for use with Loft back to wall WC
- Thermoset seat
- Top & under fixings
- 2x button quick release
- Adjustable soft close hinges with Secure-Fix QR technology keeps seat firmly in place

O803SC-SF	£52.30

WALL HUNG WCs

AERIAL - WALL HUNG WC

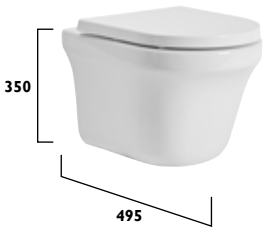

- 495mm projection
- Easi-clean rimless design
- Horizontal outlet
- Must be mounted on specialist fixing frame, see page 90
- Concealed fixings with 180mm spaced fixing centres
- Use with Aerial toilet seat TS650S

WH650S	£332.00

STRUCTURE - WALL HUNG WC

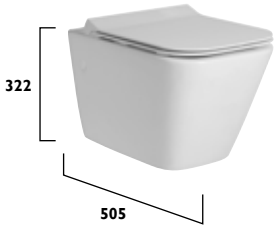

- 505mm projection
- Horizontal outlet
- Must be mounted on specialist fixing frame, see page 90
- Concealed fixings with 180mm spaced fixing centres
- For use with Structure toilet seats TS450S or TS45IS, see page 86

WH450S	£330.00

ORBIT WALL HUNG WC

- 510mm projection
- Easi-Clean rimless design
- Horizontal outlet
- Must be mounted on specialist fixing frame, see page 90
- Concealed fixings with 180mm spaced fixing centres
- Use with Orbit seat TS250S

WH250S	£375.00

VIBE - WALL HUNG WC

- 535mm projection
- Horizontal outlet
- Must be mounted on specialist fixing frame, see page 90
- Concealed fixings with 180mm spaced fixing centres
- For use with Vibe toilet seat TS700S, see page 87

WH700XS	£317.00

MICRA EVO - WALL HUNG WC

- 510mm projection
- Easi-Clean rimless design
- Horizontal outlet
- Must be mounted on specialist fixing frame, see page 90
- Concealed fixings with 180mm spaced fixing centres
- Use with Micra Evo seat DC14037

WH250S	£375.00

LOFT - WALL HUNG WC

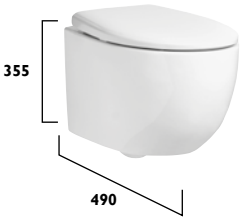

- 490mm projection
- Horizontal outlet
- Must be mounted on specialist fixing frame, see page 90
- Concealed fixings with 180mm spaced fixing centres
- For use with Loft toilet seat O803SC-SF, see page 87

PWHPAN	£320.00

WALL HUNG WC FRAMES

1.17M WALL HUNG WC FRAME

For In-Wall Applications

- 1.17m high for in-wall applications
- 500mm width
- Adjustable depth 140-200mm (for side or floor exit pipe runs), 110mm min depth if pipe work routed straight through wall
- Adjustable height legs (200mm adjustment)
- 6/3L pneumatic flush valve
- Top entry ½" BSP (male) inlet valve connection
- Front access panel for maintenance
- Polystyrene anti-condensation jacket
- 0.2-10.0bar working pressure range
- Brackets, fixings & 1st fix protective covers included
- Selection of flush plate options available separately, see page 92

TR9006	**£300.00**

1.0M WALL HUNG WC FRAME

For Boxed in Applications (especially under windows)

- Ideal for boxed in applications, especially under windows
- 500mm width
- Adjustable depth 167-215mm
- Adjustable height legs (200mm adjustment)
- 6/3L pneumatic flush valve
- Side entry ½" BSP (female) inlet valve connection
- Top & Front access panel for maintenance
- Polystyrene anti-condensation jacket
- 0.2-10.0bar working pressure range
- Brackets, fixings and 1st fix protective covers included
- Selection of flush plate options available separately, see page 92

TR9015	**£300.00**

0.82M WALL HUNG WC FRAME

For 600mm & Wider WC Units

- 0.82m high for use within 600mm & wider furniture WC units
- 500mm width
- Adjustable depth 167-215mm
- Adjustable height legs (200mm adjustment)
- 6/3L pneumatic flush valve
- Side entry ½" BSP (female) inlet valve connection
- Front or top access panel for maintenance
- Polystyrene anti-condensation jacket
- 0.2-10.0bar working pressure range
- Brackets, fixings & 1st fix protective covers included
- Choose the Furniture Adaptor Kit (WHFFK) when using the frame in furniture installations
- Selection of flush plate options available separately, see page 92

TR9005	Frame	**£300.00**
TR9007	Adaptor	**£51.40**

0.4M WALL HUNG WC FRAME

For Narrow Back To Wall WC Units Including 500mm wide

- Compact half height WC frame suitable for use in narrow back to wall units including 500mm wide
- Adjustable depth 200-335
- Adjustable height legs (200mm adjustment)
- Compatible with Vortex, Apex & Comfort Height cisterns.
- Use with Comfort Height cistern when setting Wall Hung pans at comfort height in furniture installations
- Can also be used for bidets
- Brackets, fixings & 1st fix protective covers included
- Selection of flush plate options available separately, see page 92

TR9018	**£139.00**

CISTERNS

VORTEX CISTERN - BOTTOM INLET

With Chrome Flush Button

- 6/3 litre adjustable dual flush
- Pneumatic flush valve
- Chrome push button included
- Bottom entry inlet valve (½" BSP)
- Top & front access
- 0.2-10.0bar working pressure range
- 200,000 cycle endurance tested
- 135mm deep - designed to work with low height & slim depth furniture
- Includes polystyrene insulation jacket
- Optional push button upgrades available, see page 93

VOR790	£121.00

APEX CISTERN - SIDE INLET

With Chrome Flush Button

- 6/3 litre adjustable dual flush
- Pneumatic flush valve
- Chrome push button included
- Side entry inlet valve (½" BSP)
- Top & front access
- 0.2-10.0bar working pressure range
- 200,000 cycle endurance tested
- 135mm deep - designed to work with low height & slim depth furniture
- Includes polystyrene insulation jacket
- Optional push button upgrades available, see page 93

TR9002	£121.00

COMFORT HEIGHT CISTERN

With Chrome Flush Button

- Developed specifically for comfort height BTW WCs in furniture installations
- 6/3 litre pneumatic flush valve
- Chrome push button included
- Bottom entry inlet valve (½" BSP)
- Top & front access
- 0.2-10.0bar working pressure range
- 90° flush pipe
- Polystyrene insulation jacket
- Optional push button upgrades available, see page 93
- Not suitable for use with flush plates (in furniture installations)

TR9008	£121.00

IN-WALL CISTERN

For Narrow Back To Wall WC Units Including 500mm wide

- Ideal for tiled-in applications
- All parts serviceable through flush plate aperture
- 6/3 litre pneumatic flush valve
- Side entry inlet valve (½" BSP)
- Front or top access panel for maintenance
- 0.2-10.0bar working pressure range
- 90° flush pipe
- Flush pipe securing bracket
- Polystyrene insulation jacket
- Selection of flush interface options available separately, see page 93

TR9009	£137.50

FLUSHING OPTIONS

SQUARE FLUSH PLATE

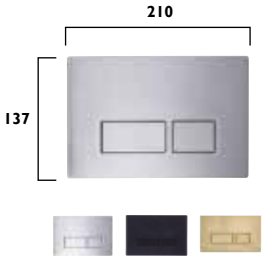

- Pneumatic dual flush push plate
- Compatible with wall hung frames & in-wall cisterns

TR9019	Stainless Steel	£110.00
TR9010	Chrome	£46.30
TR9020	Black	£56.80
TR9036	Brushed Brass	£92.50

CIRCLES FLUSH PLATE

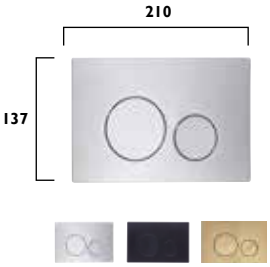

- Pneumatic dual flush push plate
- Compatible with wall hung frames & in-wall cisterns

TR9012	Chrome	£46.30
TR9021	Black	£56.80
TR9037	Brushed Brass	£92.50

TRADITIONAL FLUSH PLATE

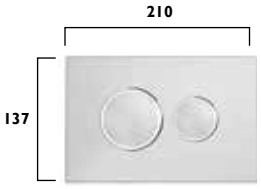

- Pneumatic dual flush push plate
- Compatible with wall hung frames & in-wall cisterns
- White traditional indices

TR9017	Chrome	£53.30

ELLIPSE FLUSH PLATE

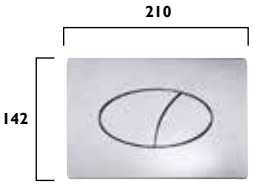

- Pneumatic dual flush push plate
- Compatible with wall hung frames & in-wall cisterns

TR9004		£46.30

GLASS DUAL FLUSH SENSOR PLATE

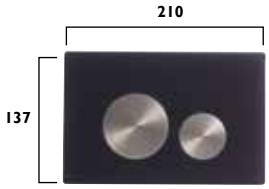

- Pneumatic dual flush push plate
- Compatible with wall hung frames & in-wall cisterns

TR9030	Black	£134.00

TOUCH SENSOR DUAL FLUSH PLATE

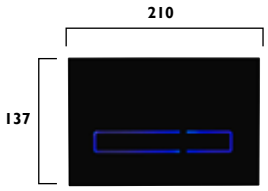

- Activated by the lightest touch
- LED illumination on flush
- Dual flush
- Best for use with wall hung WC frames
- If used within furniture, suitable for standard depth only
- Battery operated (4 x AA batteries)
- Glass fascia

TR9016	Black	£165.00

CONTACTLESS DUAL FLUSH SENSOR PLATE

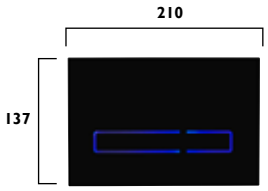

- Contactless flushing
- Powered by 4x AA batteries
- Low battery power alarm
- Dual flush
- Manual override flush
- Illuminates on operation
- Use on wall hung & In-wall cisterns (Not suitable for slim depth furniture)

TR9025	Black	£165.00

CONTACTLESS DUAL FLUSH SENSOR

- Touchless flush activation
- Dual flush
- Best for use with concealed cisterns
- Battery operated (4 x AA batteries)
- Provision must be made for access if installed in-wall

TR9014		£147.50

OVAL DUAL FLUSH BUTTON

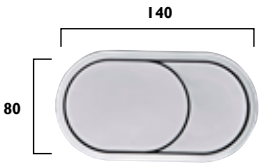

- Larger flush interface, easy to install, template supplied
- Compatible with concealed cisterns
- If used with wall hung frames provision must be made for access in lieu of flush plate

TR9023		£58.50

SQUARE FLUSH BUTTON

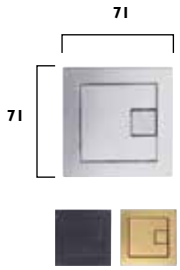

- Pneumatic dual flush push button
- Compatible with concealed cisterns
- If used with wall hung frames provision must be made for access in lieu of flush plate

TR9003	Chrome	£17.10
TR9028	Black	£21.40
TR9035	Brushed Brass	£42.80

ROUND FLUSH BUTTON

- Pneumatic dual flush push button
- Compatible with concealed cisterns
- If used with wall hung frames provision must be made for access in lieu of flush plate

TR9022	Black	£21.40
TR9034	Brushed Brass	£42.80

TIPS FOR PLANNING YOUR BATHROOM

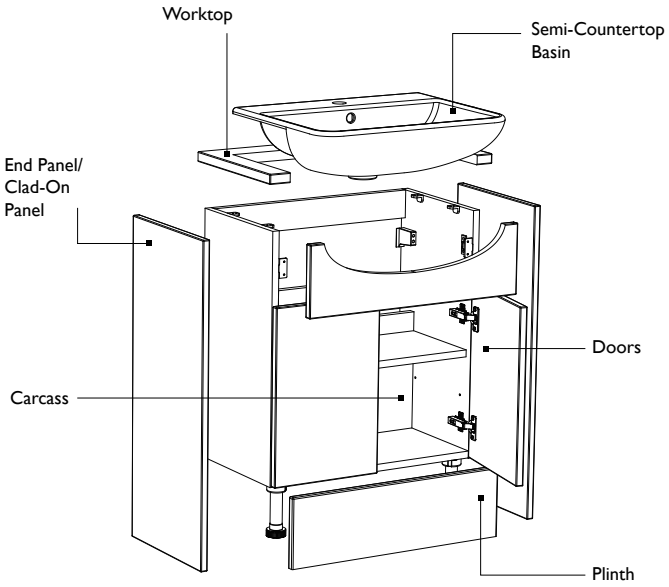

01

UNDERSTANDING FITTED FURNITURE COMPONENTS

Fitted furniture units are made up from a number of components and can seem quite confusing at first glance. It can be difficult to understand the need for some items such as clad-on end panels and plinths. So to simplify it we have put together a handy diagram of one of our units, breaking down each component, allowing you to understand exactly how your completed fitted furniture unit is created.

02

UNDERSTANDING YOUR BATHROOM LAYOUT & PLANNING

In order to make the installation process as pain-free as possible it is advised, where possible that you try and install your basin, WC and bath in a similar position to any existing plumbing. This will minimise the installation time and cost. Before going to see a Tavistock fitted furniture specialist, it may be helpful to complete the following planning steps.

Firstly measure your bathroom and draw a plan including the door direction (in case this needs to be re-hung to accommodate the new layout). Make reference to the location of each service and soil pipe.

Finally ensure all dimensions including windows, doors, radiator and extractor fan positions are marked up on your drawing. Providing this detail at this early stage will then give you the freedom to experiment with placing different unit combinations within your bathroom plan when visiting the retailer.

HELPFUL TIP

Clad-on end panels are required to cover the carcass colour on any exposed furniture run end.

They can also be cut in half and used in between adjoining units to create a traditional framed look and feel which is particularly effective when used with Legacy furniture.

03

USEFUL INFORMATION ON BATHROOM UNITS, BASINS & WCs

Our ranges are available in both standard and slim depth formats. Using slim depth furniture in small en-suites or cloakrooms can help maintain vital space in the room without sacrificing bathroom storage.

Semi-countertop basins are available in both slim and standard depth formats and can be mounted on both laminate or solid surface worktops by an experienced fitter.

HELPFUL TIP

All fitted furniture doors will require your fitter to drill and fit your handles, giving you the flexibility to position them exactly where you want.

The use of a WC unit and concealed cistern can create a clean uncluttered look for your bathroom. Our dual flush concealed cisterns operate by a pneumatic push button which can be sited in the front removable fascia of the WC unit, or on the top of the unit if desired (only with standard depth WC units. Flush buttons can only be installed on the front fascia of slim depth units.) Our WC units feature a panel which goes to the floor, removing the need for unsightly filler blocks that are sometimes used to fill the void between the back to wall WC pan and the plinth.

If a wall hung WC is required, then a suitable supporting frame must be used (see page 90). Never fit a wall hung pan directly to the fascia of a WC unit alone. Speak to your retailer for more details on compatibility.

04

CONCEALING UNSIGHTLY PIPEWORK

One of the benefits of using our fitted furniture is that unsightly pipework can run along skirting boards and walls whilst being concealed behind units. The furniture is designed with a plinth height of 180mm, which means that even soil pipes can run under the units.

All standard depth base units feature a generous 50mm void at the back, which allows waste pipes and copper pipes to run along the walls whilst being concealed behind the units. Your fitter will only have to notch out the side panel of the unit where the pipe traverses. In addition to the 50mm pipe void, basin units in both slim and standard depth configurations feature a removable back panel to aid the installation process.
See diagrams below.

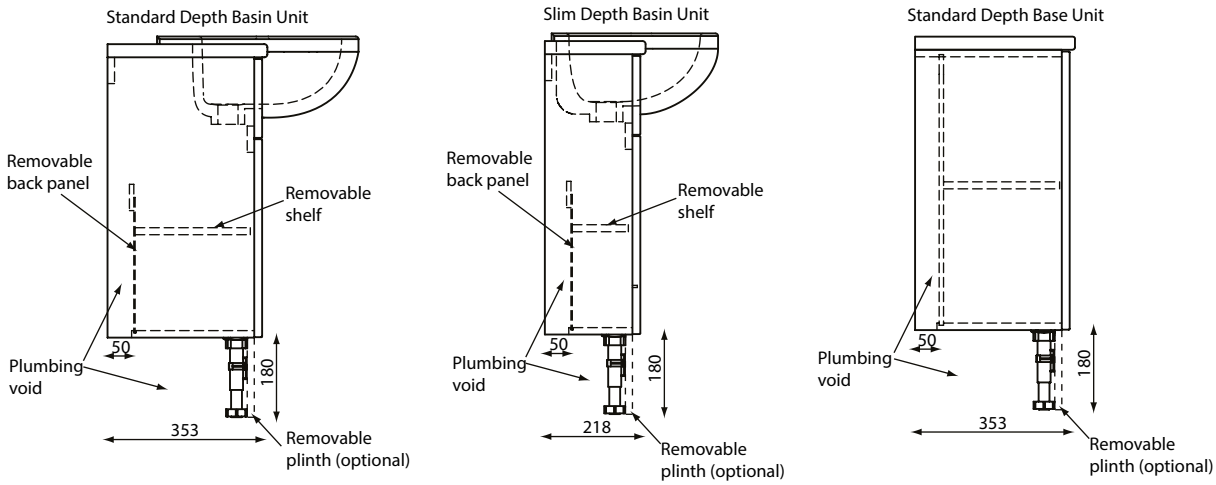

05

STEAM FREE MIRRORS

Many of our mirrors feature heated demister pads to prevent them from misting up. Always use a qualified electrician when installing this type of mirror. Illuminated mirrors and cabinets must be mounted so that the sensor switch is a minimum of 150mm from any adjacent wall or obstruction to ensure function of the sensor switch. Please note, mirrors must never be installed above a bath or shower.

06

BATH PANEL INSTALLATION RECOMMENDATIONS

Designed to complement all door styles. Both front and end panels are supplied with a matching plinth which allows for adjustment depending on site conditions. To achieve a continuous look between the furniture and the bath panel, it is recommended that the panel is set at a height of 520mm, so that a plinth height of 180mm is achieved.

Note: Once installed all bath panels must be sealed along the top, bottom and sides with a suitable silicone sealant to prevent damage from excessive moisture.

GUARANTEES & USEFUL INFORMATION

GUARANTEES

Giving you complete peace of mind

At Tavistock we are extremely proud of our products and our confidence in their quality is such that we offer extended guarantees on many of them, including a 10 year guarantee on all furniture and taps plus a 20 year guarantee on all basins and WCs.

All products are guaranteed against defective workmanship or materials. Length of guarantee depends on the product type - please refer to relevant section of the brochure.

Attention is drawn to the policy of replacing any damaged part with a spare part where possible. Complete exchanges will only be made if damage is extensive. All dimensions are approximate and are quoted within reasonable tolerances.

SWATCH SAMPLES

The Tavistock Collection

Our free swatch sample service is designed to help you make the right finish choices for your home. If you would like a sample of any of our furniture or worktops then please visit our website and fill in the sample request form. Alternatively you will find displays of our fitted furniture and colour samples of finishes and worktops at our specialist retailers across the UK and Ireland. To find your nearest showroom visit our website.

tavistock-bathrooms.co.uk/swatches/

WEBSITE & BROCHURES

The Tavistock Collection

For more on our complete Tavistock product offering, please visit our website where you can view detailed information and electronic copies of our most recent brochures, which include:

- Tavistock Bathroom Directory
- Tavistock Classic Collection
- Fitted Furniture Collection
- Mirrors & Cabinets Collection

Be sure to visit our look book to inspire your next bathroom design.

tavistock-bathrooms.co.uk/brochures/

STOCKISTS

Specialist independent bathroom stockists

Tavistock fitted furniture products are available to view at our selected specialist stockists throughout the UK and Ireland.

Head over to our website now to find your nearest supplier.

tavistock-bathrooms.co.uk/stockists/

CUSTOMER SERVICE

If you have a query all you have to do is pick up the phone. A member from our highly trained customer services team will be able to help you.

Call 01225 787870 to speak to a member of our customer service team.

Our lines are open:
Monday – Thursday 9am – 5.30pm
Friday 9am – 5pm

or email us at
info@tavistock-bathrooms.co.uk

PRODUCT SPECIFICATION

We invest heavily in product improvement and reserve the right to amend specifications at any time if an opportunity to further improve the product occurs to ensure complete customer satisfaction.

The furniture colours shown are representative only and can be affected by a multitude of factors such as lighting and surrounding items. If you are unsure we would recommend obtaining a swatch from our website or visit your local retailer and testing in the intended bathroom area.

Tavistock furniture is designed for use within domestic installations which are adequately ventilated and is not suitable for installation in wet rooms. As with any timber product, bathroom furniture will be adversely affected if it is subjected to excessive moisture. It is strongly recommended that adequate bathroom extractor fans are installed to prevent heavy condensation and all splashes and spillages must be mopped dry as soon as possible. All exposed or cut surfaces must be sealed with a suitable varnish or silicone sealant to prevent blowing. If this is not done, all warranty claims will be void. In particular, silicone sealant must be used around basin and worktop joints and around all edges of bath panels and plinths. All electrical products should be installed by an approved electrician in line with current wiring regulations.

REPLACEMENT PARTS

We carry extensive stocks of replacement parts and are normally able to dispatch spares within 24 hours of your request. Attention is drawn to the policy of replacing any damaged part with a spare part where possible. Complete exchanges will only be made if damage is extensive.

PRICING

All prices are quoted inclusive of VAT which will be charged at the rate applicable on the date of despatch. The prices charged will be those ruling at the date of despatch and Tavistock cannot be held responsible for any errors or omissions to products or prices.

All products and prices shown in this brochure are correct at the time of press.

ACKNOWLEDGEMENTS

Viewpoint Photography +44 (0)1761 419998 viewpoint-photography.co.uk
Mandarin Stone +44 (0)1600 715444 mandarinstone.com
Eskimo +44 (0)207 117 0110 eskimodesign.co.uk
Industville +44 (0)207 971 7871 www.industville.co.uk

TAVISTOCK

Customer Service
01225 787870
info@tavistock-bathrooms.co.uk
tavistock-bathrooms.co.uk
Brassmill Lane Trading Estate, Bath, BA1 3JF

TAVFFJUN22